BASE UNIT

972 L Corner

Assembly Guide

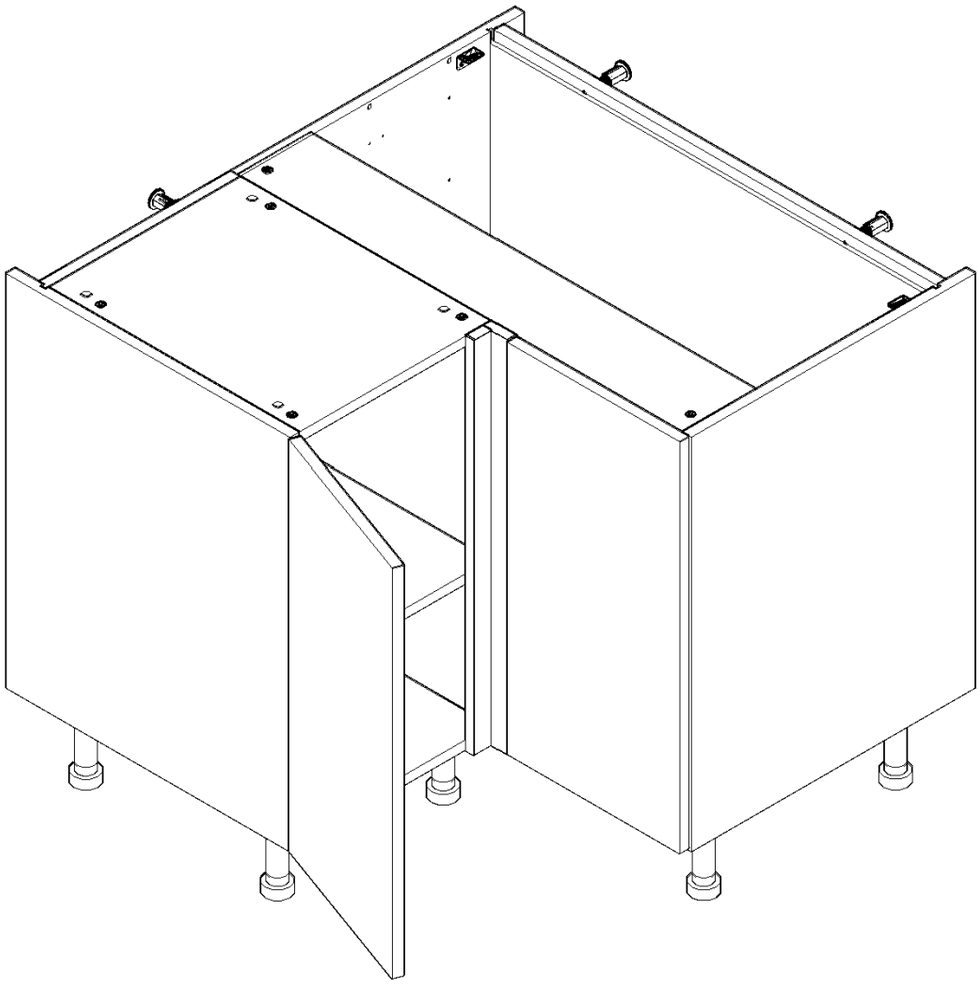

wren KITCHENS

BASE UNIT

972 L Corner

Assembly Guide

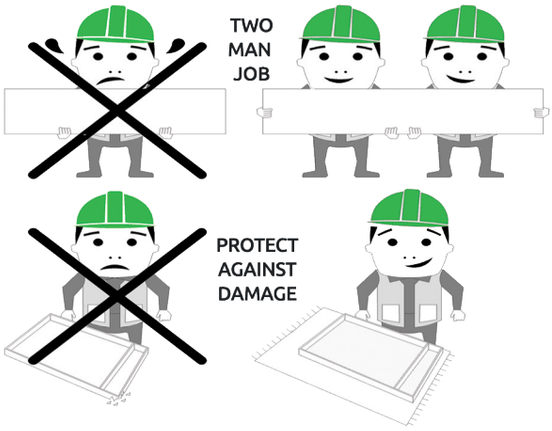

BEFORE YOU START

INSTALLATION SHOULD BE PERFORMED BY A COMPETENT PERSON ONLY.

THIS PRODUCT COULD BE DANGEROUS IF INCORRECTLY INSTALLED

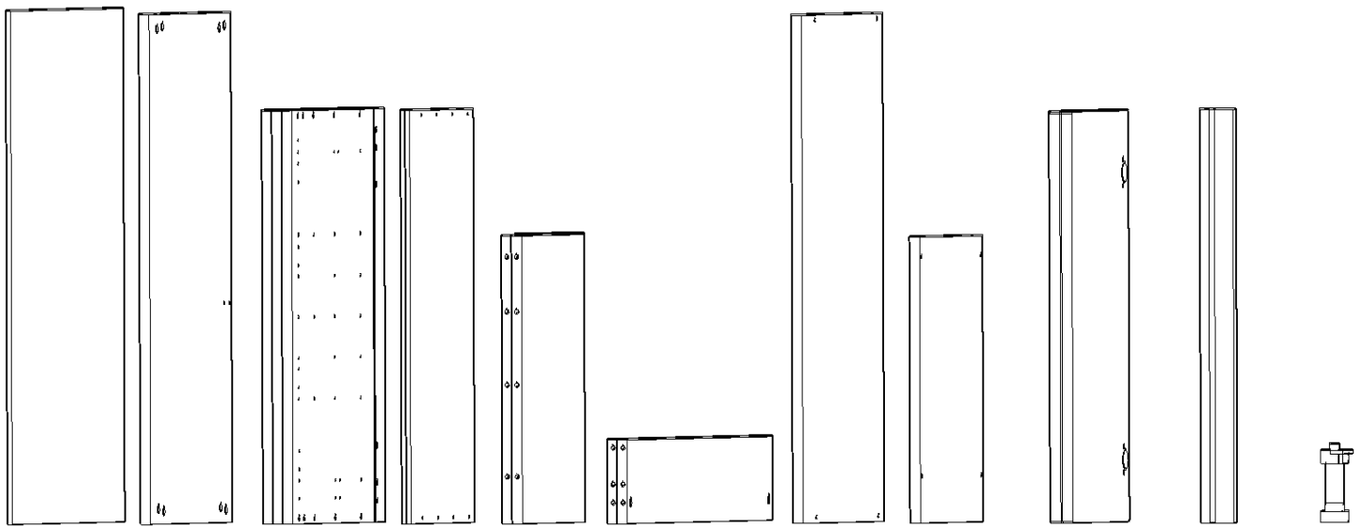

Panel A x1 Back Panel | **Panel C** x1 Fixed Shelf | **Panel B** x3 End Panels | **Panel S** x1 2nd Back Panel | **Panel T** x2 Fixed Shelf | **Panel E** x2 Rail | **Loose Shelf** x1 Large | **Loose Shelf** x1 Small | **Frontal** x2 Packed Seperately | **Corner Post** Packed Seperately | **Legs** x9

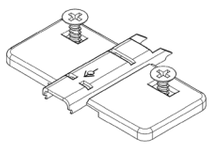

Hinge Mounting Bracket
x4 Inc Screws

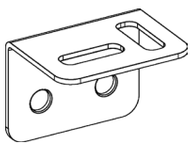

Large L Bracket
x2

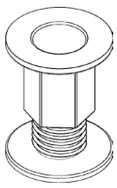

Space Plug
x2

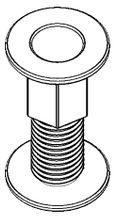

XL Space Plug
x2

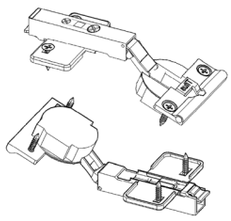

Hinge
x4 Inc Screws

(F) x16
Wooden
Dowel

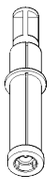

(G) x12
Cam Dowel
(Expanding)

(H) x12
Cam Lock

(P) x8
45mm Screw
Black

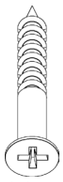

(K) x4
30mm
Screw

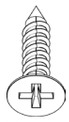

(L) x76
15mm
Screw

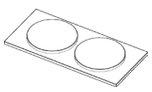

(N) x2
Door Buffer

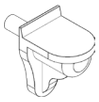

(Z) x6
Shelf Peg
Plastic

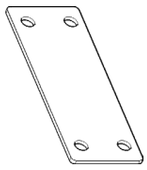

(U) x10
Fixing Plate

REQUIRED TOOLS

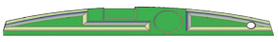

NOT to be used with CAM DOWEL & CAM LOCK

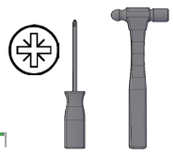

BASE UNIT

972 L Corner

Assembly Guide

Step 1.
Seat dowel **(F)** into holes in both end panels **(B)** as shown.

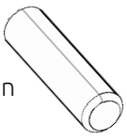

Step 2.
Seat cam dowel **(G)** into holes in both end panels **(B)** as shown.

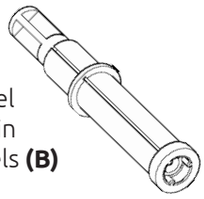

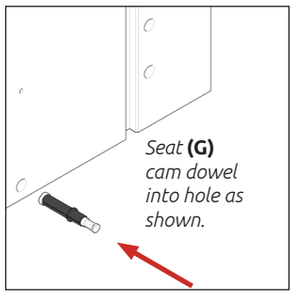

CARCASS 1

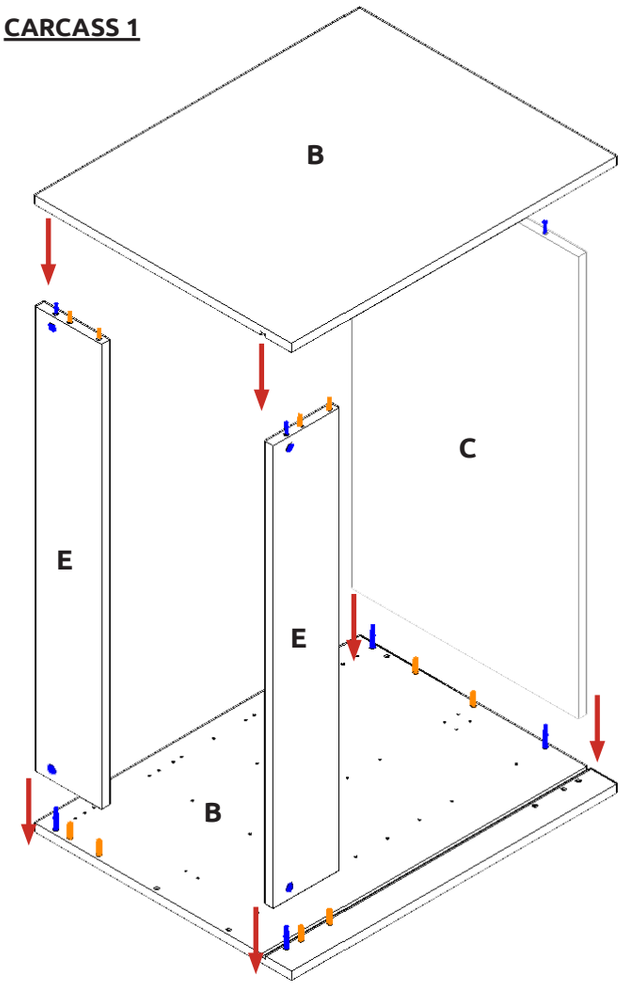

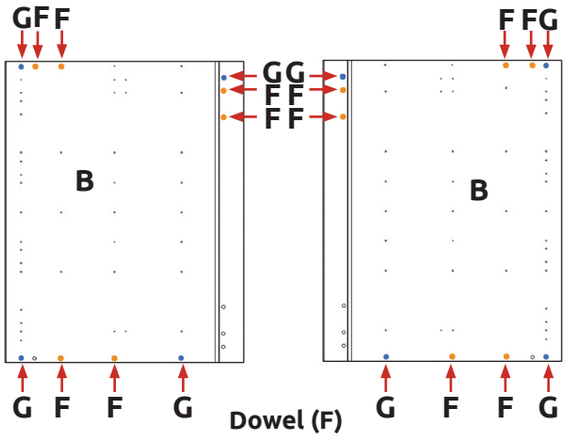

Dowel (F) & Cam Dowel (G) location detail

Step 3.
Attach panels **(C)** & **(E)** to panels **(B)**, using cam dowel **(G)** & cam lock **(H)** (in blue) and also using dowels **(F)** (in orange) in positions as shown.

All **Cam Locks (H)** are to be positioned facing the outside of the unit carcass, for ease of tightening.

Do **NOT** use power tools with cam dowel **(G)** or cam lock **(H)**

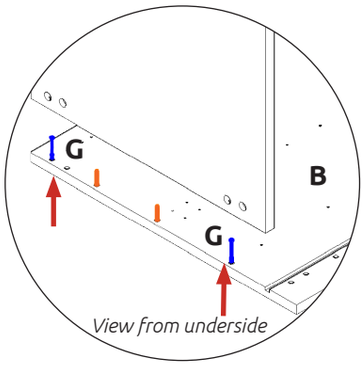

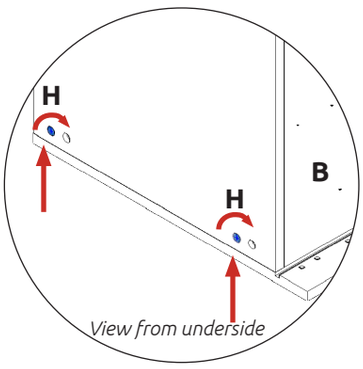

Step 4.
Join panels **(C)** & **(E)** to **(B)**.
Insert cam lock **(H)**
Do **NOT** tighten until Step 6.

BASE UNIT
972 L Corner

Assembly Guide

Step 5.
Slide back panel **(A)** into groove of panels **(B).**

Once back panel **(A)** is in position, ensure the panel is flush & square with the bottom of the end panels **(B)**

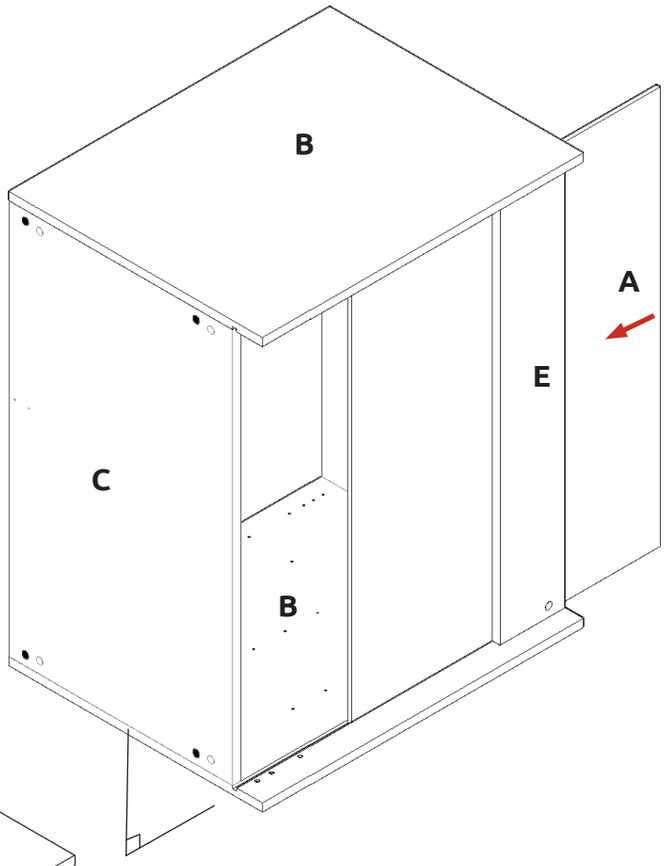

Step 6.
Hand tighten all cam locks **(H)**, this will expand the cam dowels **(G)** and tighten the unit together.

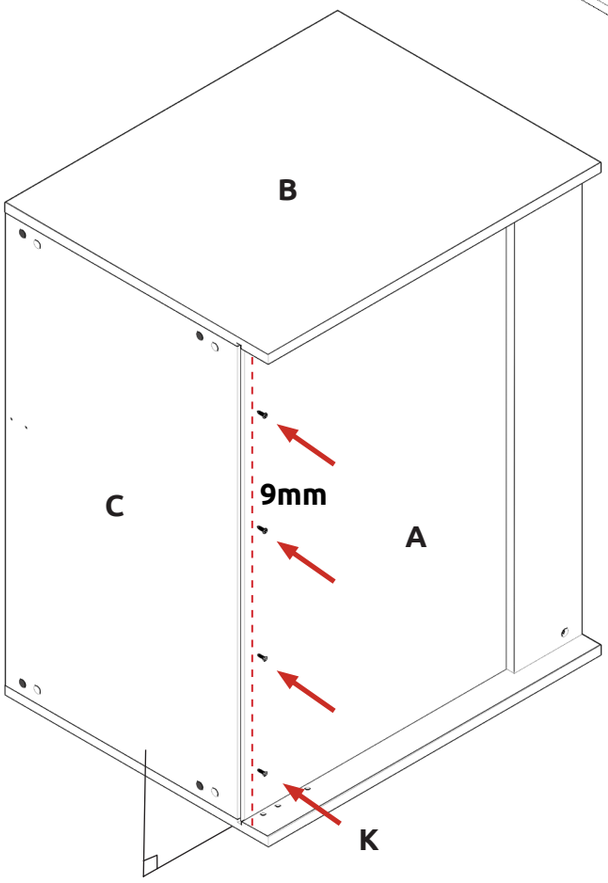

Step 7.
Secure back panel **(A)** with 4x 30mm screws **(K)** equally spaced at the bottom of back panel **(A)** into base panel **(C)**, as shown.

Ensure you screw into the centre of base panel **(C)** (9mm from the bottom edge).

BASE UNIT
972 L Corner

Assembly Guide

Step 8.
Seat dowel **(F)** into holes in both end panels **(B)** as shown.

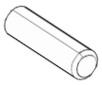

Step 9.
Seat cam dowel **(G)** into holes in both end panels **(B)** as shown.

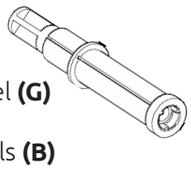

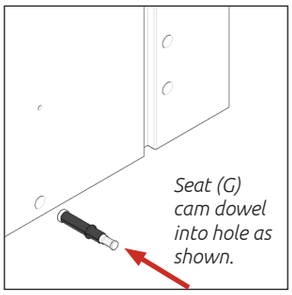

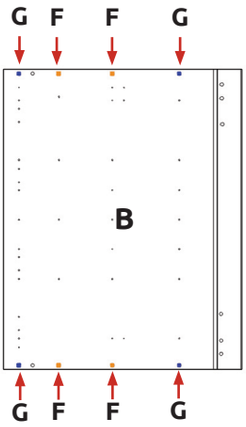

Dowel (F) & Cam Dowel (G) location detail

CARCASS 2

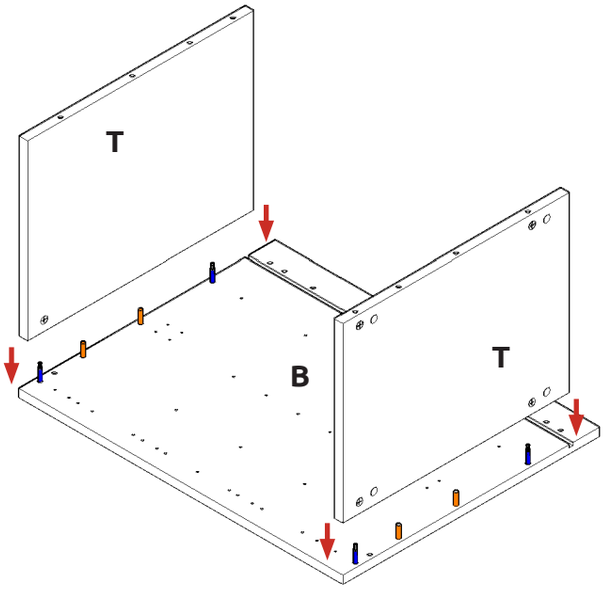

Step 10.
Attach both panels **(T)** to panel **(B)**, using cam dowel **(G)** & cam lock **(H)** (**in blue**) and also using dowels **(F)** (**in orange**) in positions as shown.

All **Cam Locks (H)** are to be positioned facing the outside of the unit carcass, for ease of tightening.

Do **not** use power tools with cam dowel **(G)** or cam lock **(H)**

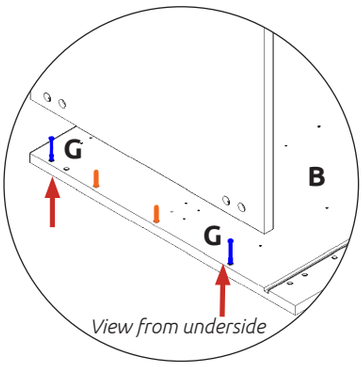

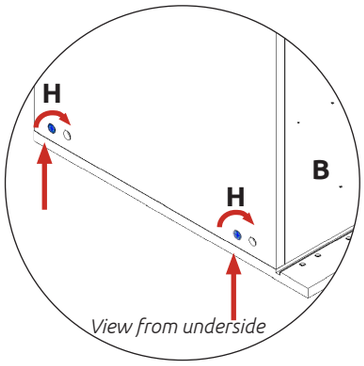

Step 11.
Join both panels **(T)** to **(B)**.
Insert cam lock **(H)** and tighten.

BASE UNIT
972 L Corner

Assembly Guide

Step 12.
Secure panel **(S)** with 4x 45mm screws **(P)** at the top and 4x 45mm screws **(P)** in the bottom, in the holes provided as shown.

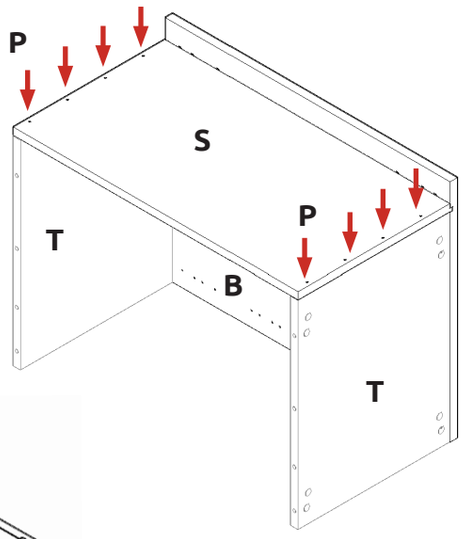

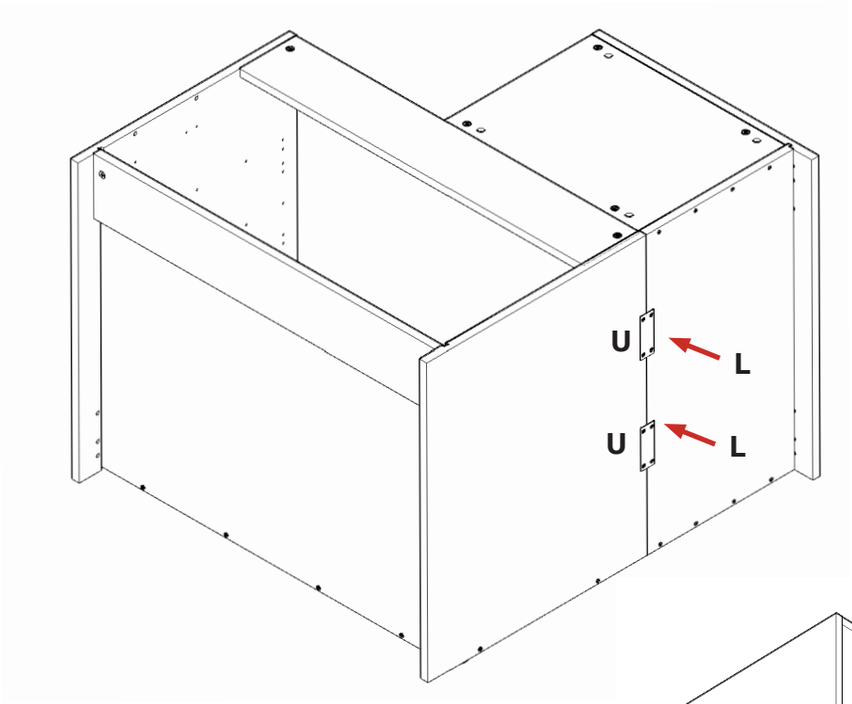

Step 13.
Secure both carcasses together using fixing plates **(U)** with 4x 15mm screws **(L)** to each plate **(U)**. Plates **(U)** should be positioned equally spaced as shown.

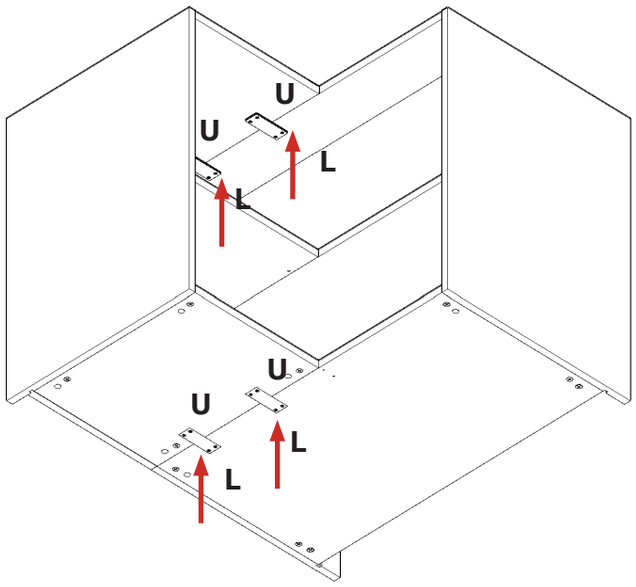

BASE UNIT
972 L Corner

Assembly Guide

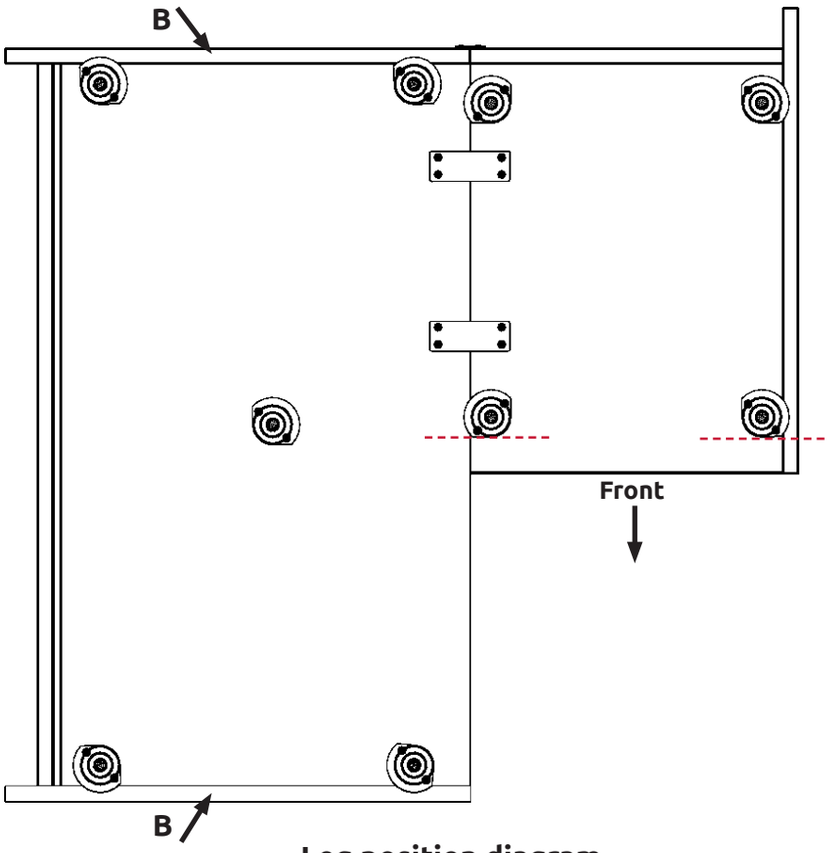

Leg position diagram

Step 14.
Secure each of the legs into place with 2x 15mm screws **(L)**

Ensure legs are rotated as shown so that part of it is supporting the end panels **(B)**.

Front legs should have flat edge to the front.

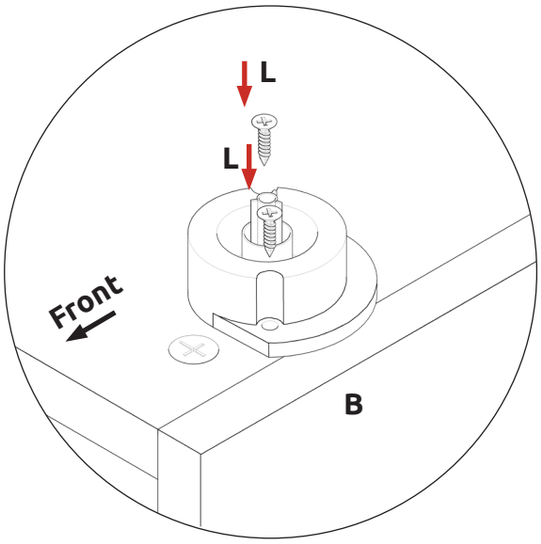

Step 15.
Lightly hit centre peg of leg base with a hammer until flush.

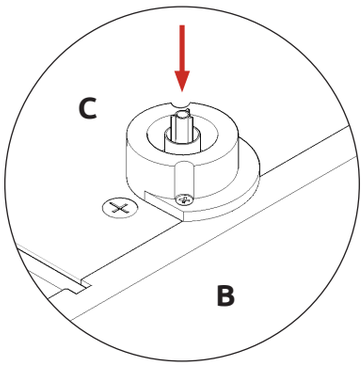

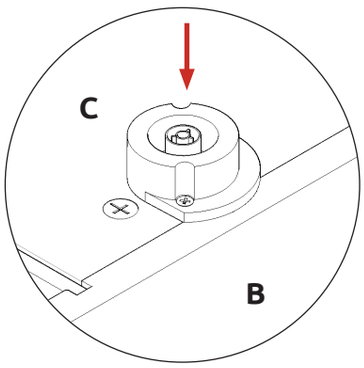

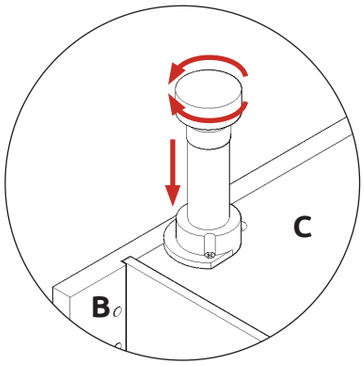

Step 16.
Push leg firmly down into the leg base.
Adjust legs to 155mm before turning

BASE UNIT
972 L Corner

Assembly Guide

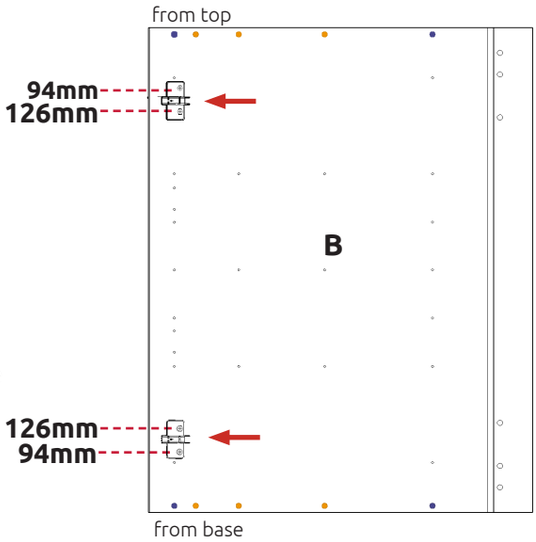

Step 17.
Attach hinge mounting plate onto both End Panels **(B)** as shown, using Screws which are already positioned within the Hinge Plates.

Hinge side to be mounted in accordance to customer kitchen plan.

For securing to adjacent units, screw into any side units using the 30mm screws **(K)** provided to secure to the unit. Screw just to the rear of the hinge plate at the top and bottom of both sides of the unit, place a cover cap **(M)** on the head to conceal it.

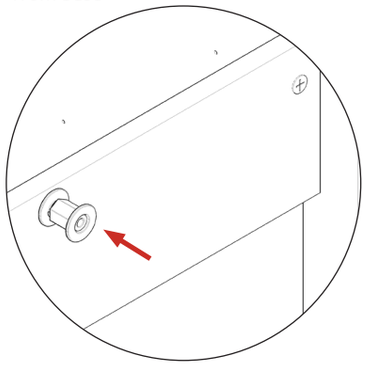

Secure unit to wall using space plugs. Drill 2 pilot holes through the back brace into the wall and insert wall plugs. Then unwind space plug until it contacts both surfaces. Finally, tighten the screws.

Screws for attaching to walls are not provided as these vary depending on your wall material and construction. Ensure appropriate fixings for wall construction are used.

Screw up through the front rail into your worktop to secure it in place.

Screws for attaching to worktop are not supplied as these vary depending on worktop material and thickness. Ensure appropirate fixings for attaching worktop are used please refer to the specialist worktop supplier if these are required for solid surface worktops.

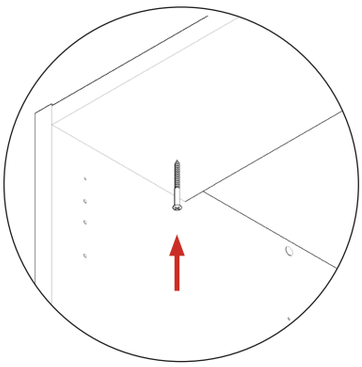

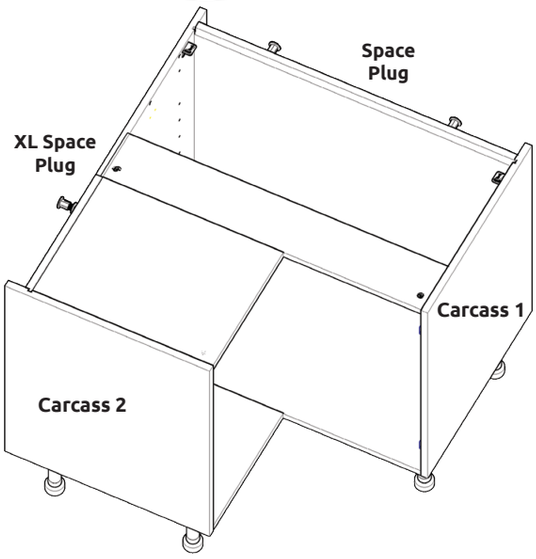

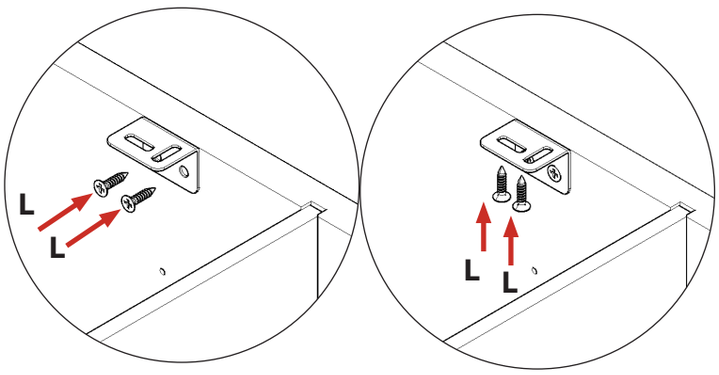

L Brackets
Use 2x 15mm screws **(L)** to secure each of the L brackets to the cabinets at either side. Then screw up through into the worktop as shown.

Screws for attaching to worktop are not supplied as these vary depending on worktop material and thickness. Ensure appropirate fixings for attaching worktop are used. L brackets should only be fitted for securing wood and laminate worktops, please refer to the specialist worktop supplier if these are required for solid surface worktops.

BASE UNIT
972 L Corner

Assembly Guide

Step 18.
Align corner post to frontal. Equally space 2 fixing plates **(U)** to the back of frontal & corner post.
Ensure a 3mm gap is maintained between frontal & post once fixed together.
Screw in place using 4 x 15mm screws **(L)** per fixing plate **(U)**.

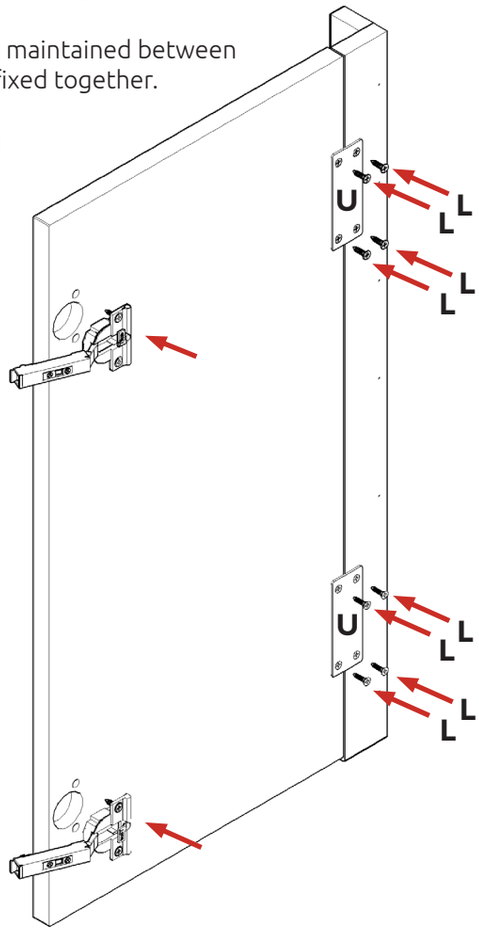

Step 19.
Secure hinges by tightening 2 x screws with hinge dowels attached. These are already positioned within the hinges.

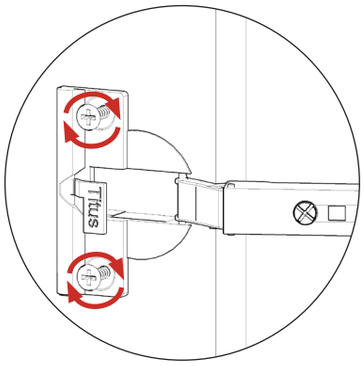

Step 20.
Attach the door to unit where required.

To attach door clip hinge onto hinge plate and click to secure.

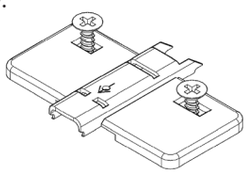

Hinge Plates

Step 21.
Adjust hinge to suit. As shown below.

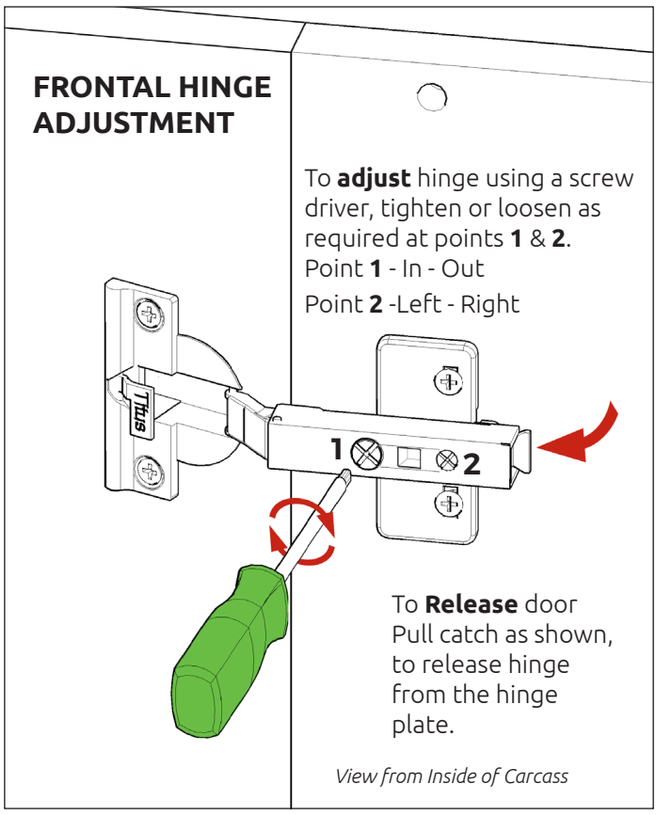

Step 22.
Fit cover caps to hinge.
Adjust Softclose to suit.

Hinge Cover Caps

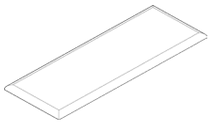

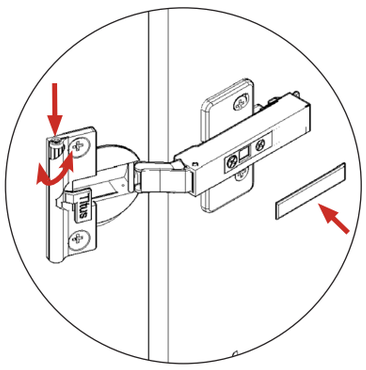

The top and bottom hinges **MUST** be adjusted to the **SAME STRENGTH.**

BASE UNIT

972 L Corner

Assembly Guide

BASE UNIT

972 L Corner

Assembly Guide

wren
KITCHENS