BASE UNIT

500 3/4 Drawer

Assembly Guide

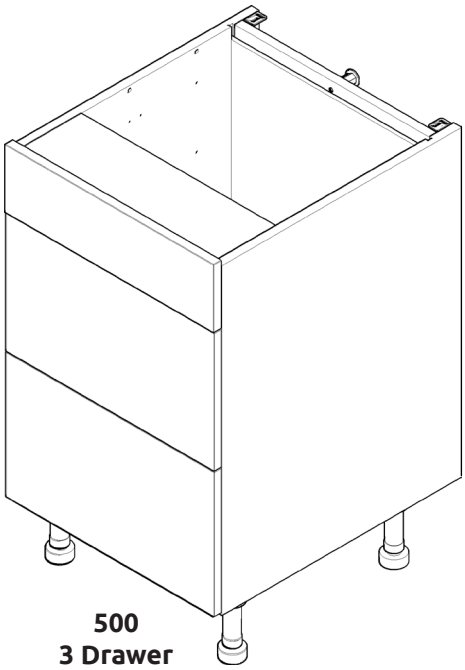

500
3 Drawer

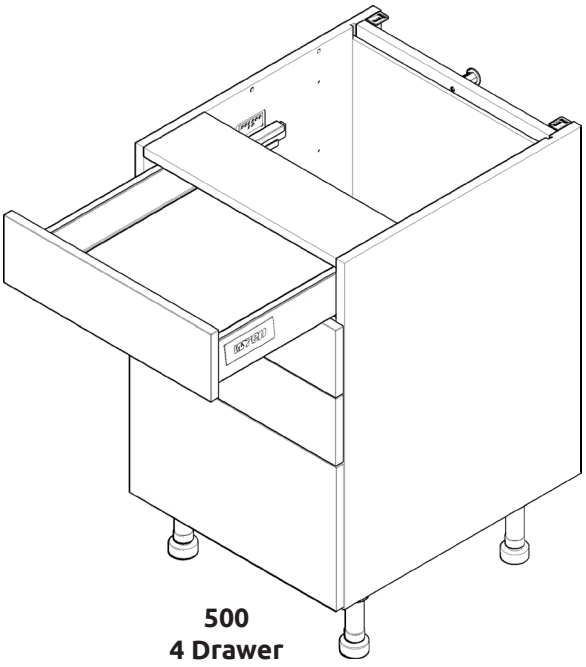

500
4 Drawer

wren KITCHENS

BASE UNIT

500 3/4 Drawer

Drawer Assembly

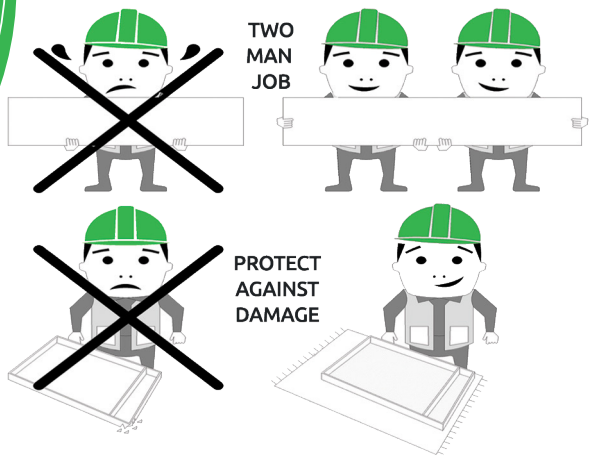

BEFORE YOU START

INSTALLATION SHOULD BE PERFORMED BY A COMPETENT PERSON ONLY.

THIS PRODUCT COULD BE DANGEROUS IF INCORRECTLY INSTALLED

Standard Drawer (Packed Separately)

Fitting Pack Contents

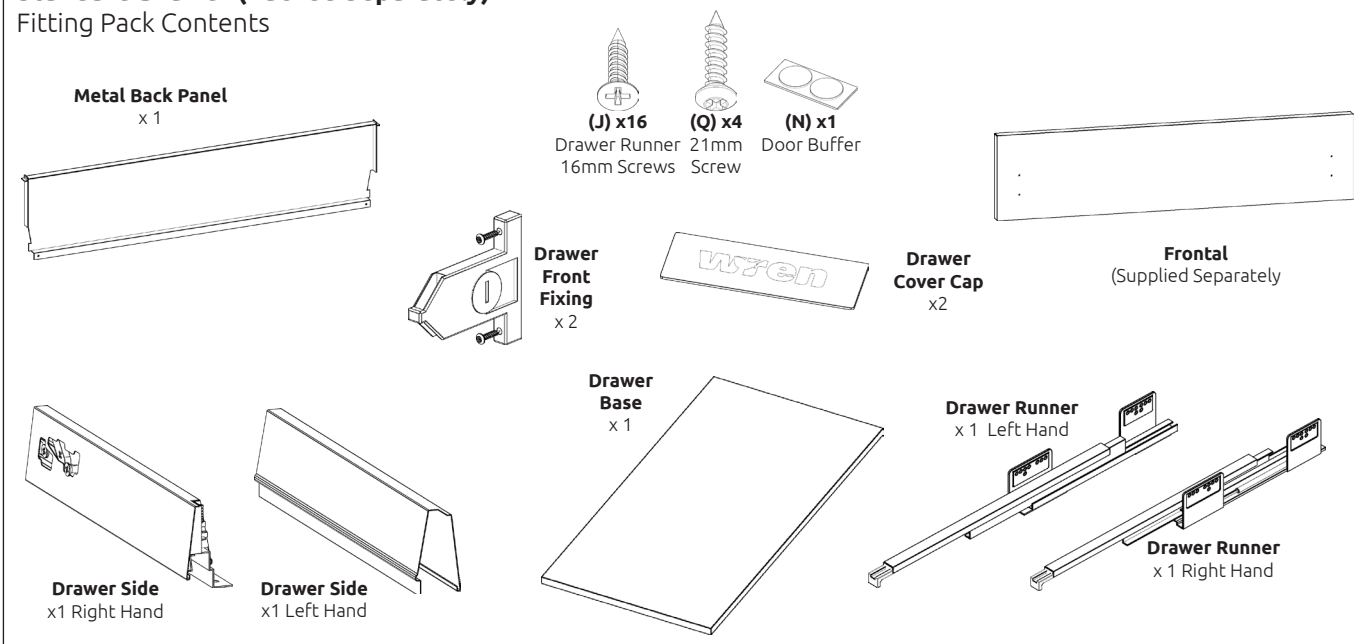

Deep Drawer (Packed Separately)

Fitting Pack Contents

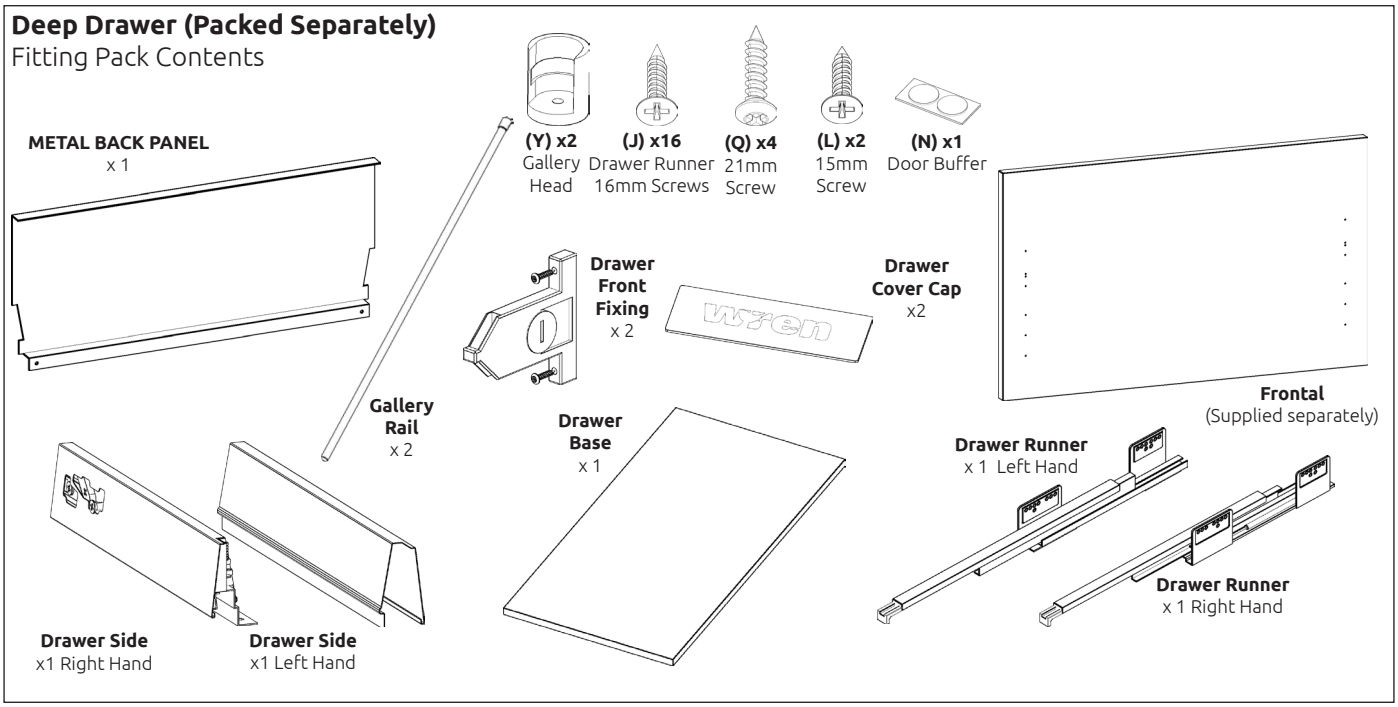

REQUIRED TOOLS

For Internal Use: FI.WR.INS.028_WKIN00109_BASE_500_3/4Drawer_Rev4.indd

BASE UNIT
500 3/4 Drawer

Standard Drawer Assembly

Step 1.
Secure drawer base to drawer side using 4 x 16mm drawer runner screws **(J)** in holes provided.

Seat the edge of drawer base tight into corner of casing, as shown.

The decorative face of drawer base to be positioned as shown.

Repeat step 1 so both drawer sides are attached to drawer base.

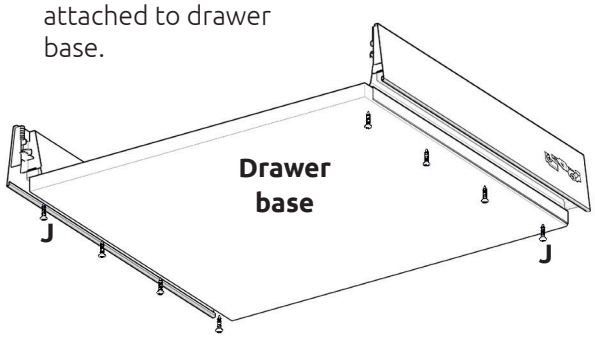

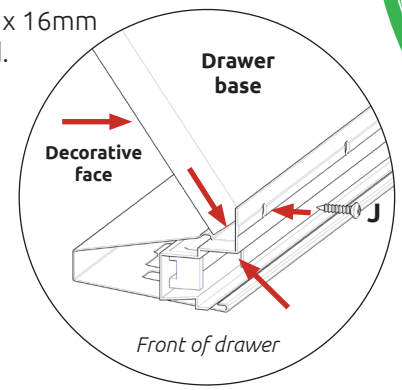

Step 2.
Clip on metal back panel to drawer base & drawer sides.

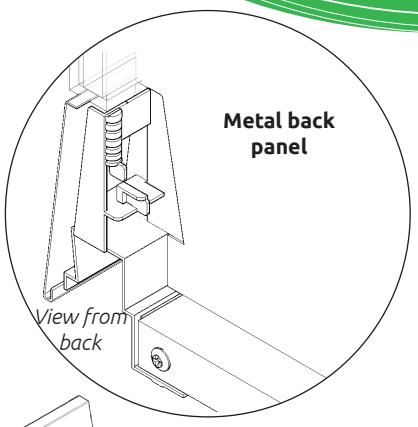

Step 3.
Screw back panel in position using 2 x 16mm screws **(J)** to drawer base in holes provided.

Step 4.
Frontal Attachment
Secure **drawer side fixing clips** using 2 x 21mm **screws (Q)** in pilot holes provided as shown.

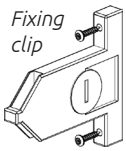

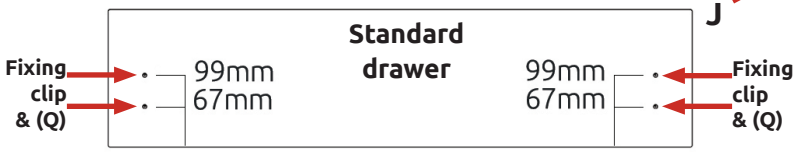

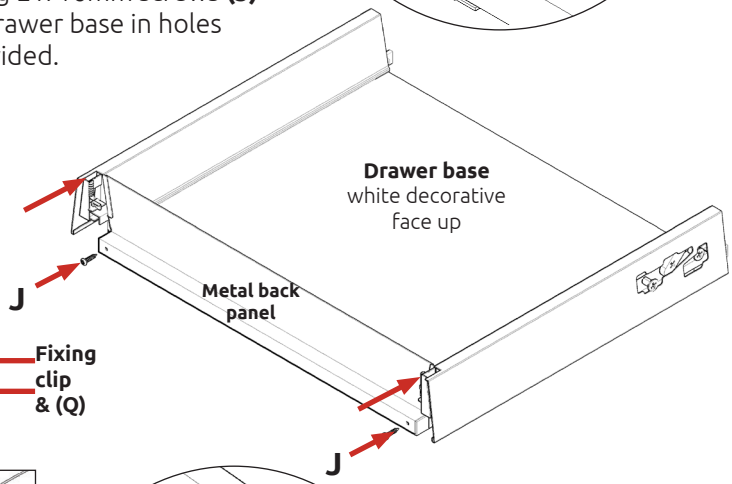

Drawer Frontal Adjustment

Step 5.
Draw Adjustment
Screw point **1** as shown to adjust drawer frontal right & left.

Screw point **2a** as shown to adjust drawer frontal up & down.

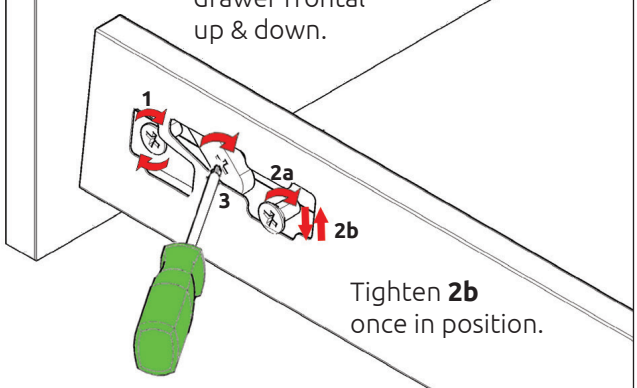

Tighten **2b** once in position.

Releasing **fixing clip.** Screw point **3** whilst applying downward pressure as shown to release.

View on side of drawer side

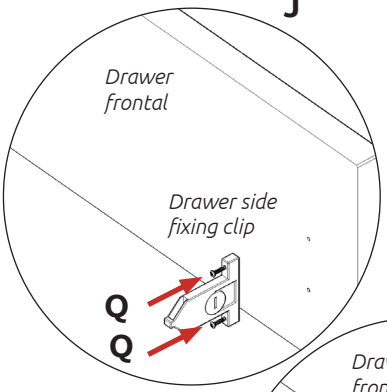

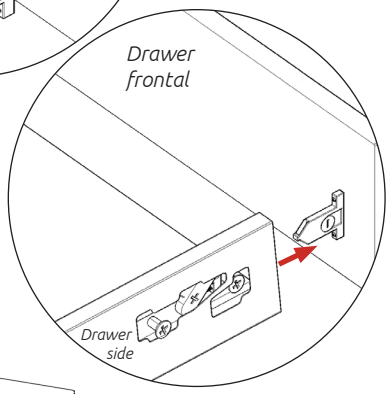

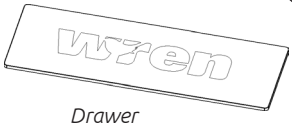

Drawer Cover Cap

Step 6.
Fit **Drawer Cover Caps** over drawer side adjustment.

BASE UNIT
500 3/4 Drawer

Deep Drawer Assembly

Step 1.
Secure drawer base to drawer side using 4 x 16mm drawer runner screws **(J)** in holes provided.

Seat the edge of drawerbase tight into corner ofcasing, as shown.

The decorative face of drawer base to be positioned as shown.

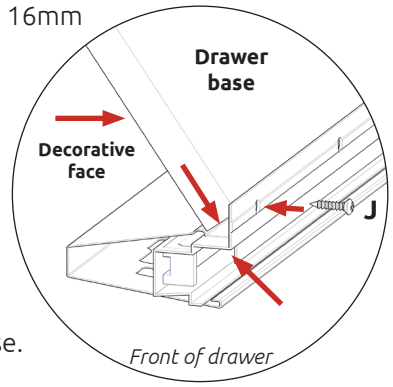

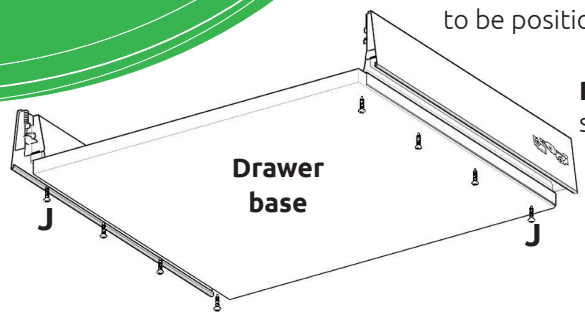

Repeat step 1 so both drawer sides are attached to drawer base.

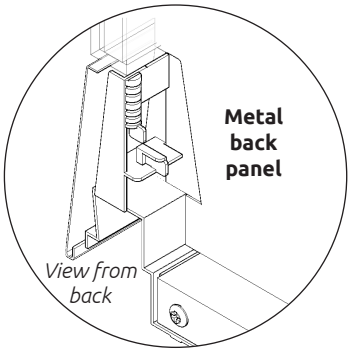

Step 2.
Clip on metal back panel to drawer base & drawer sides.

Step 3.
Screw back panel in position using 2 x 16mm screws **(J)** to drawer base in holes provided.

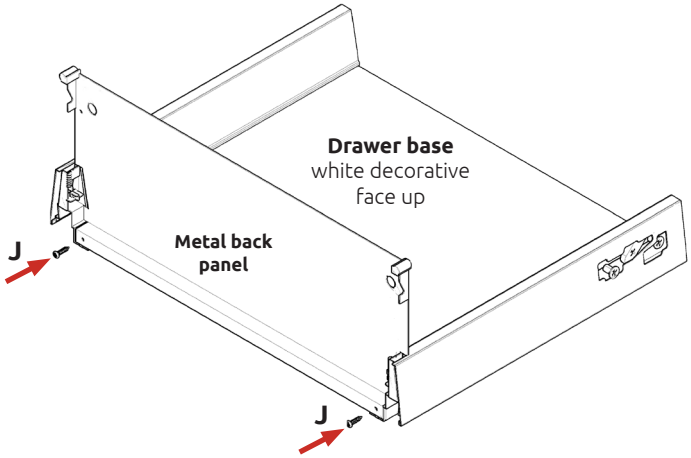

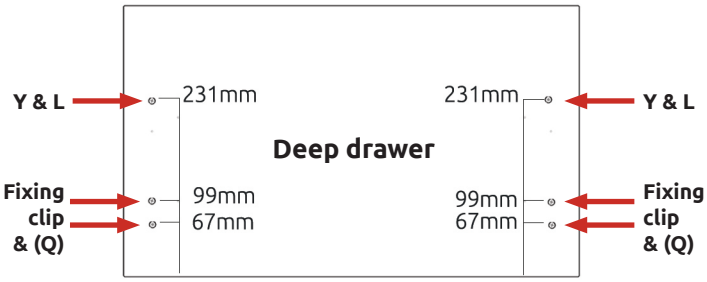

Step 4.
Frontal Attachment
Secure **drawer side fixing clips** using 2 x 21mm **screws (Q)** in pilot holes provided as shown.

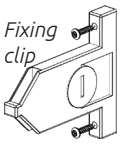

Drawer Frontal Adjustment

Step 5.
Draw Adjustment
Screw point **1** as shown to adjust drawer frontal right & left.

Screw point **2a** as shown to adjust drawer frontal up & down.

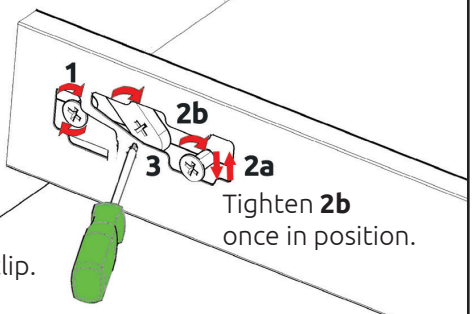

Tighten **2b** once in position.

Releasing fixing clip. Screw point **3** whilst applying downward pressure as shown to release.

View on side of drawer side

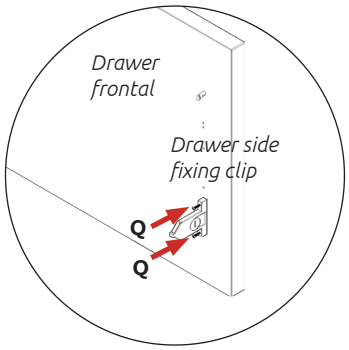

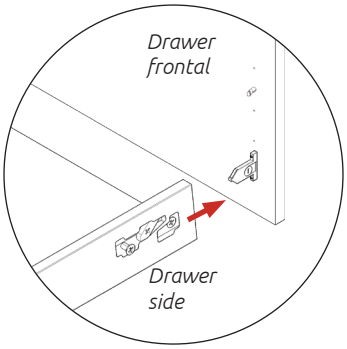

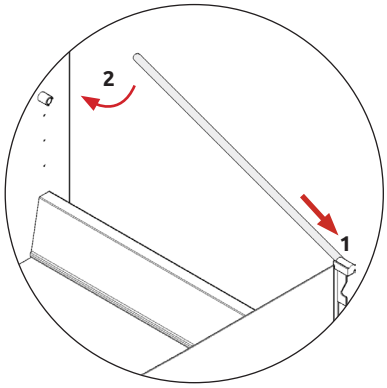

Step 6.
Fit Gallery Rail into the top corners of Metal BackPanel.
Locate front end of the Gallery Rail into the opening of the gallery Head, which is secured to the frontal as shown

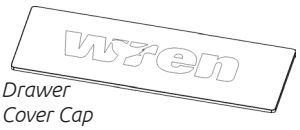

Drawer Cover Cap

BASE UNIT
500 3/4 Drawer

Carcass Assembly

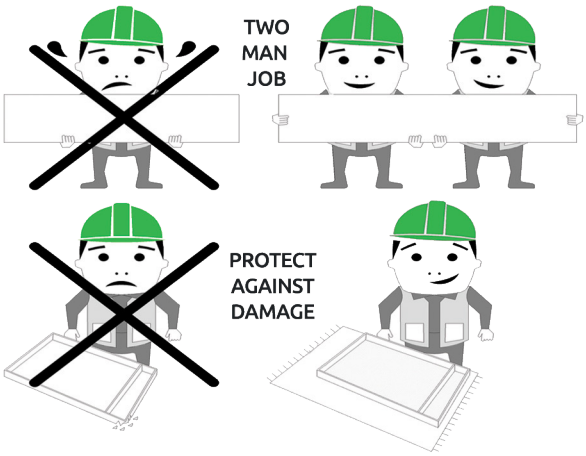

BEFORE YOU START

INSTALLATION SHOULD BE PERFORMED BY A COMPETENT PERSON ONLY.

THIS PRODUCT COULD BE DANGEROUS IF INCORRECTLY INSTALLED

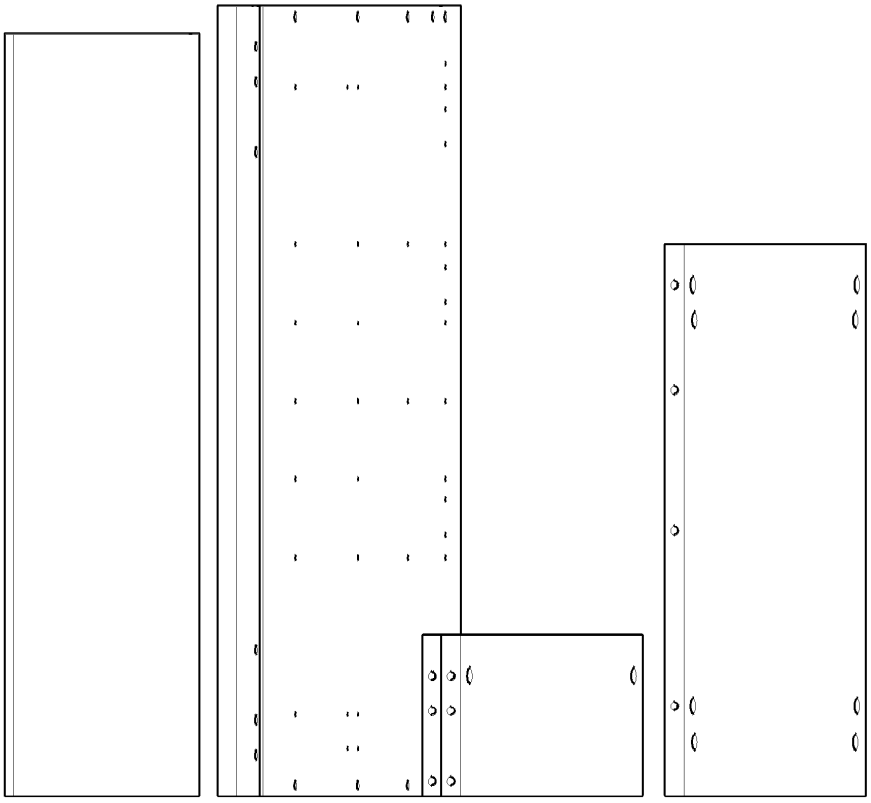

Panel A
x1 Back Panel

Panel B
x2 End Panel

Panel E
x2 Rail Panel

Panel C
x1 Base Panel

(F) x12
Wooden Dowel

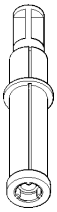

(G) x8
Cam Dowel
(Expanding)

(H) x8
Cam Lock

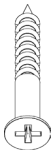

(K) x7
30mm
Screw

(L) x28
15mm
Screw

(M) x4
Cover Cap

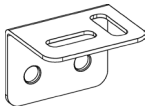

L Bracket x2

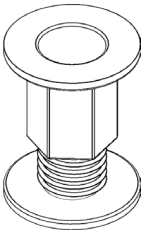

Space Plug x1

REQUIRED TOOLS

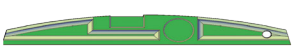

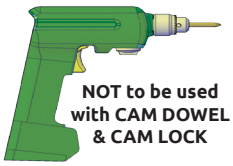

NOT to be used with CAM DOWEL & CAM LOCK

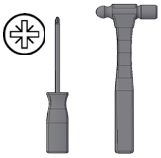

BASE UNIT

500 3/4 Drawer

Carcass Assembly

Drawer runner bracket screw position

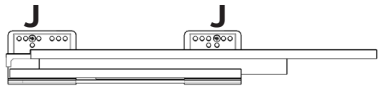

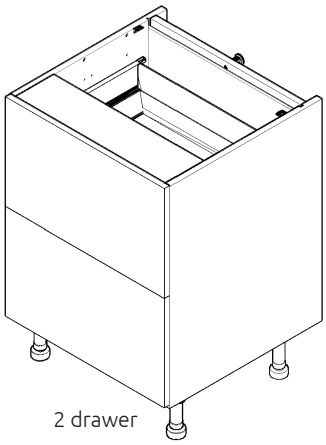

2 drawer

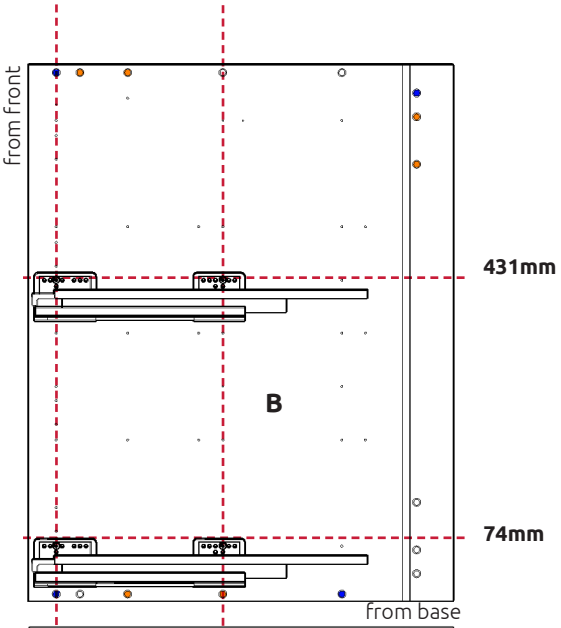

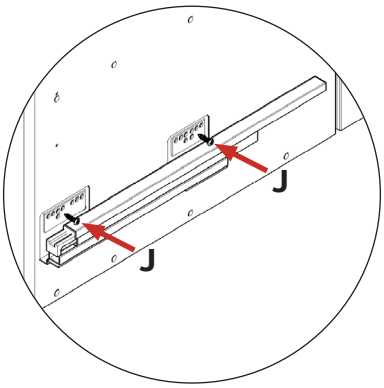

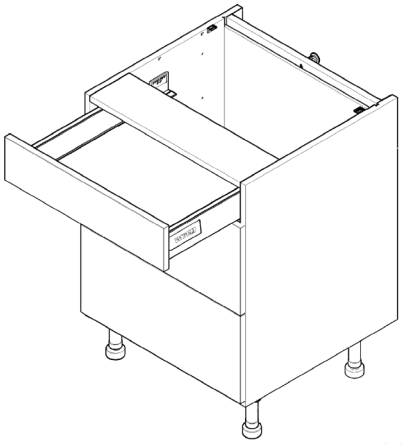

3 drawer

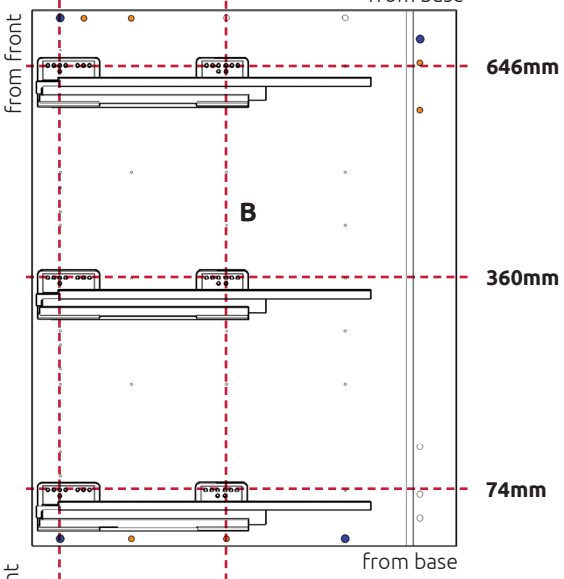

Step 1.
To attach drawer runner, screw into end panels **(B)** using 2 x 16mm screws **(J)** per drawer rail, into pilot holes provided, 3rd hole from front, as shown.

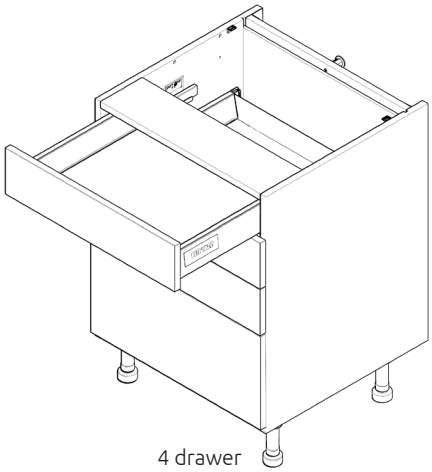

4 drawer

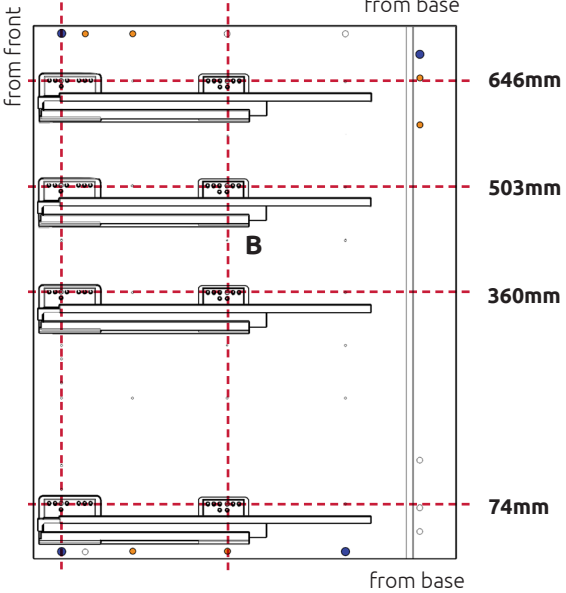

BASE UNIT
500 3/4 Drawer

Carcass Assembly

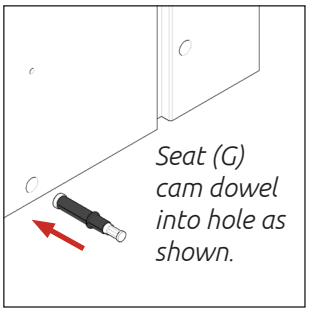

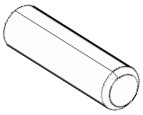

Step 2.
Seat dowel **(F)** into holes in panels as shown.

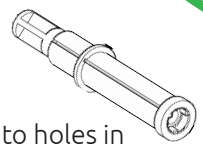

Step 3.
Seat cam dowel **(G)** into holes in panels as shown.

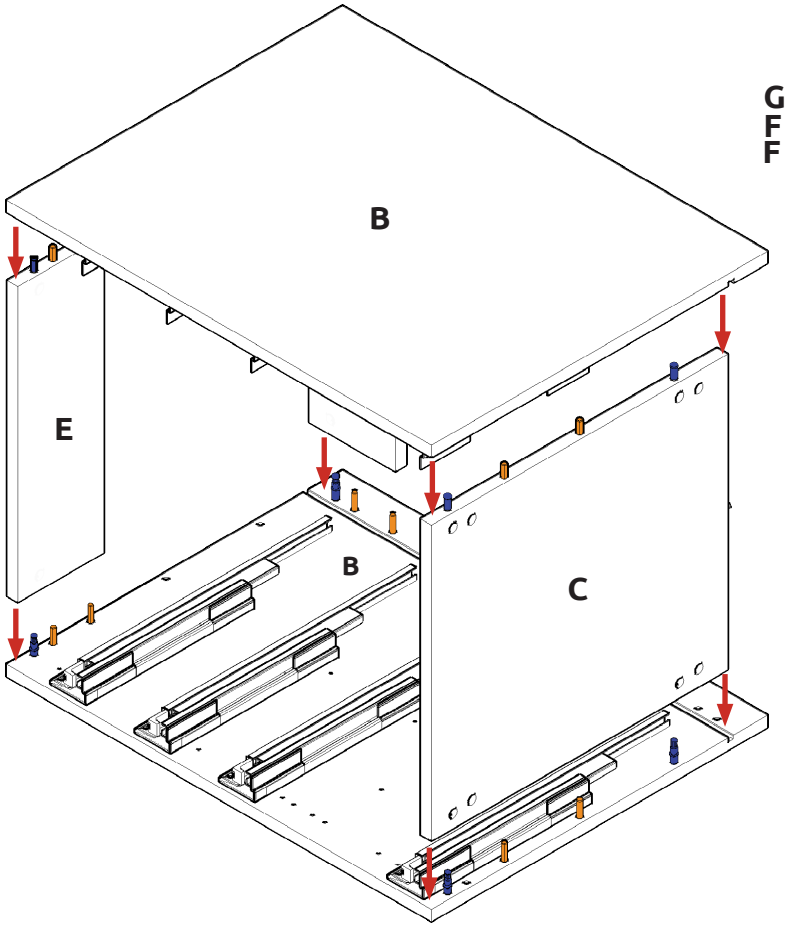

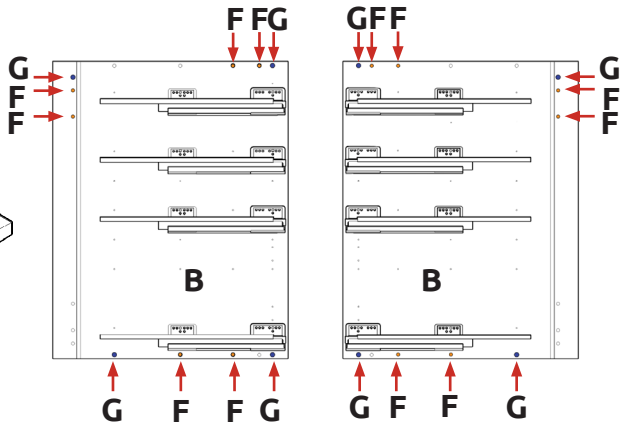

Dowel (F)
& Cam Dowel (G)
location detail

Step 4.
Attach panels **(C)** & **(E)** to panels **(B)**, using cam dowel **(G)** & cam lock **(H)** (in **blue**),
and also using dowels **(F)**
(in **orange**) in positions as shown.

Do **not** use power tools with cam dowel **(G)** or cam lock **(H)**

NB. All Cam Locks **(H)** are to be positioned facing the outside of the unit carcass, for ease of tightening.

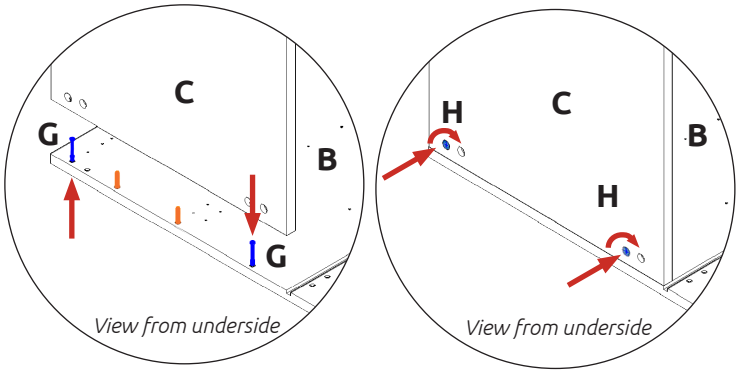

Step 5.
Join panels **(C)** & **(E)** to **(B)**.
Insert cam lock **(H)**.
Do **NOT** tighten until Step 7.

BASE UNIT
500 3/4 Drawer

Carcass Assembly

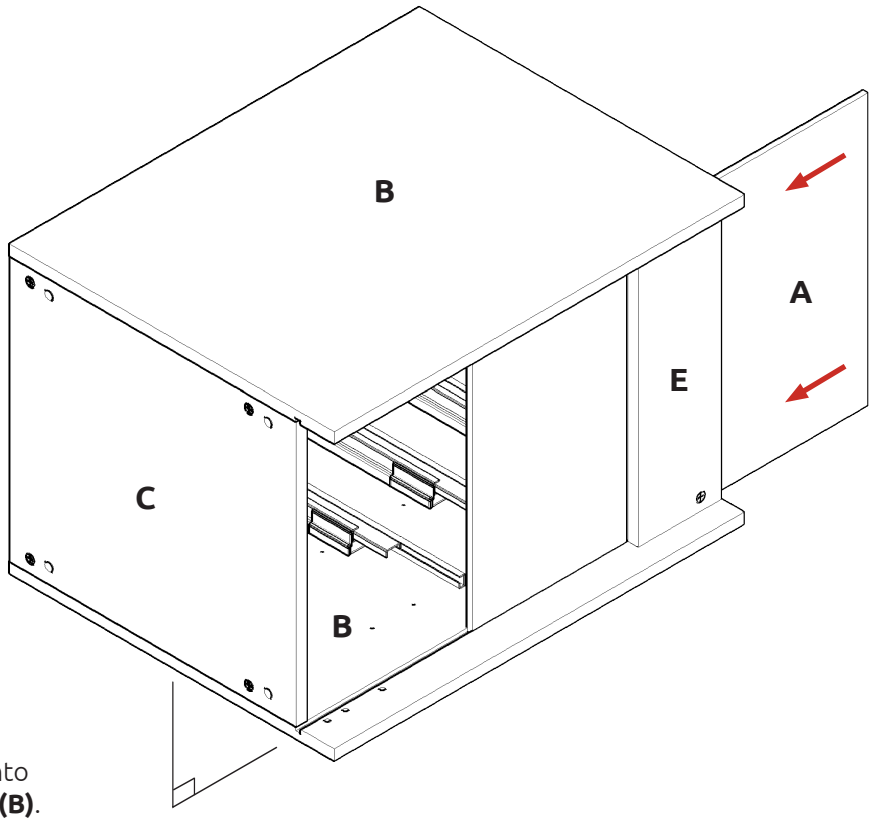

Step 6.
Slide back panel **(A)** into groove of end panels **(B)**.

Once back panel **(A)** is in position, ensure the panel is flush & square with bottom of end panels **(B)**.

Step 7.
Hand tighten all cam locks **(H)**, this will expand cam dowels **(G)** and tighten the unit together.

Step 8.
Ensure carcass is square. Secure back panel **(A)** with 3 x 30mm screws **(K)** equally spaced at the bottom of back panel **(A)** into base panel **(C)**, as shown.

Ensure you screw into the centre of base panel **(C)** (9mm from bottom edge).

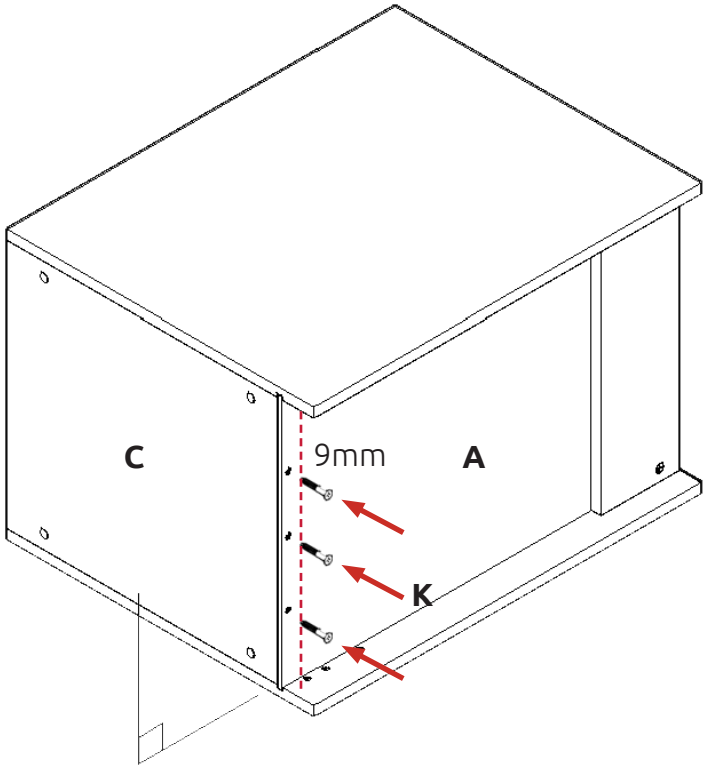

Step 9.
Secure each of the legs into place with 2 x 15mm screws **(L)** per leg

Leg position diagram

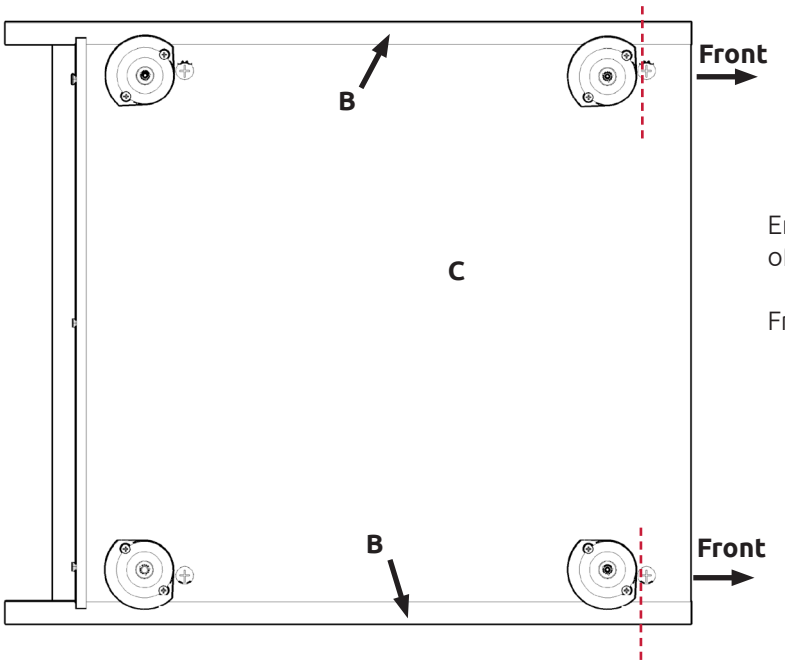

Ensure legs are rotated as shown so that part of it is supporting the end panels **(B)**.

Front legs should have flat edge to the front.

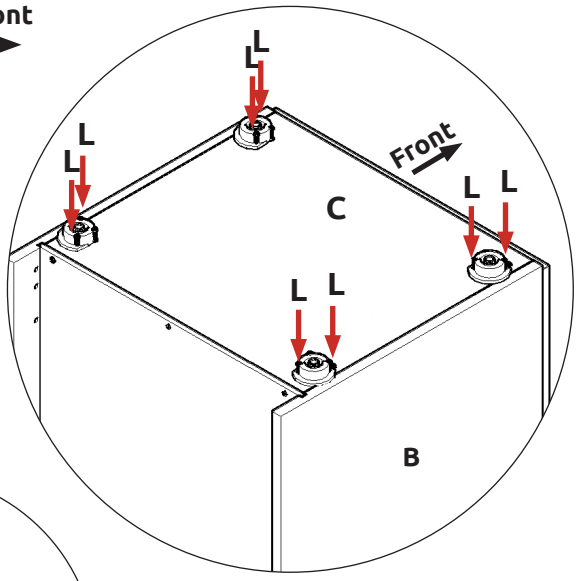

Step 10.
Lightly hit centre peg of leg base with hammer until flush with the leg base.

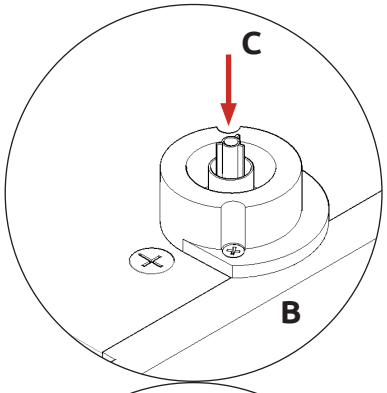

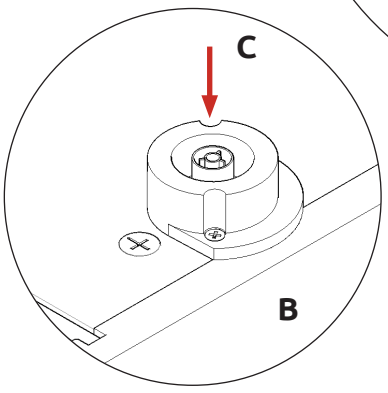

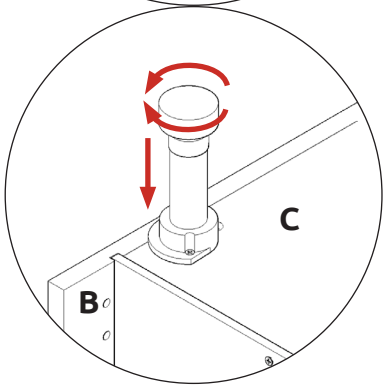

Step 11.
Push leg firmly down into leg base.
Adjust legs to 155mm before turning carcass upright. Once in situ level accordingly.

BASE UNIT
500 3/4 Drawer

Carcass Assembly

Secure unit to wall using space plug. Drill pilot hole through the back brace into the wall and insert wall plug. Then unwind space plug until it contacts both surfaces. Finally, tighten the screw.

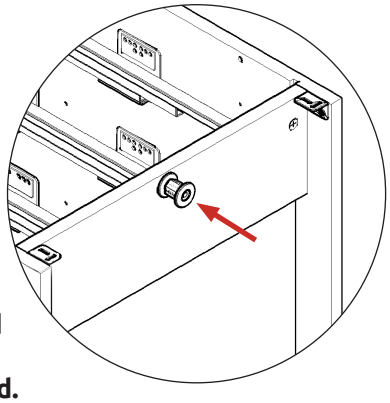

Screws for attaching to walls are not provided as these vary depending on your wall material and construction. Ensure appropriate fixings for wall construction are used.

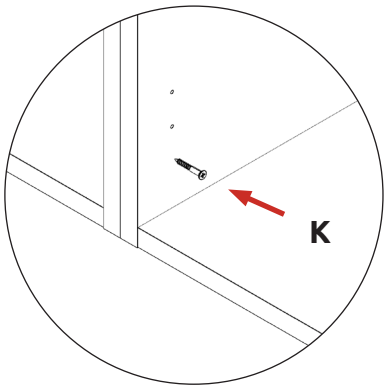

Securing to Adjacent Units

Screw into any side units using the 30mm screws **(K)** provided to secure to unit. Screw just to the rear, at the top and bottom of both sides of the unit, place a cover cap on the head to conceal it.

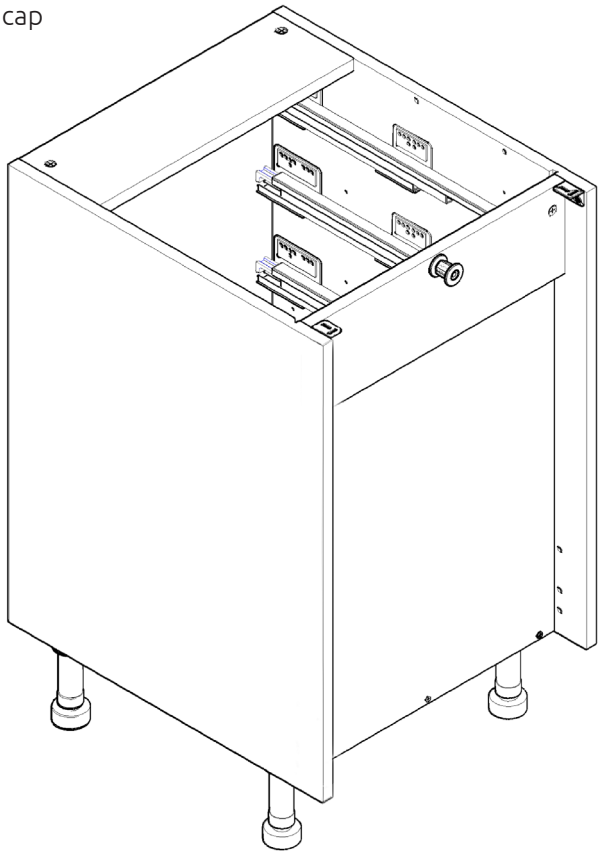

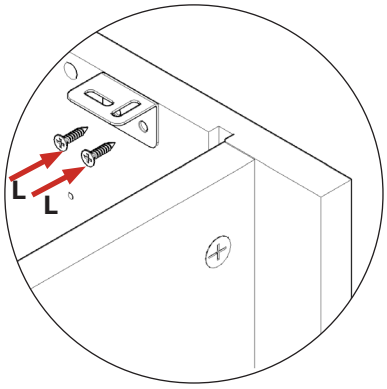

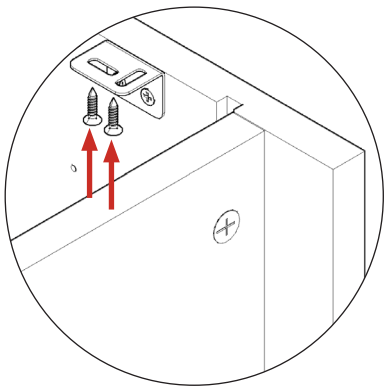

L Brackets

Use 2 x 15mm screws **(L)** to secure each of the L brackets to the cabinets at either side. Then screw up through into the worktop as shown.

Screws for attaching to worktop are not supplied as these vary depending on worktop material and thickness. Ensure appropriate fixings for attaching worktop are used. L brackets should only be fitted for securing wood and laminate worktops, please refer to the specialist worktop supplier if these are required for solid surface worktops.

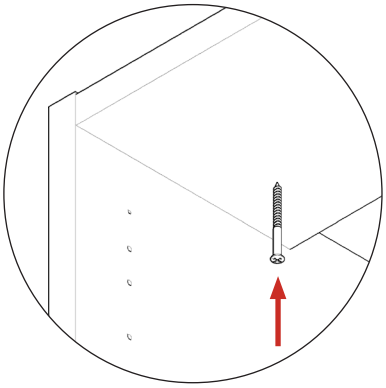

Worktop

Screw up through the front rail into your worktop to secure it in place.

Screws for attaching to worktop are not supplied as these vary depending on worktop material and thickness. Ensure appropriate fixings for attaching worktop are used. Please refer to the specialist worktop supplier if these are required for solid surface worktops.

BASE UNIT

500 3/4 Drawer

Carcass Assembly

wren
KITCHENS