BASE UNIT

600 - 1000 Hob
2/3 Drawer

Assembly Guide

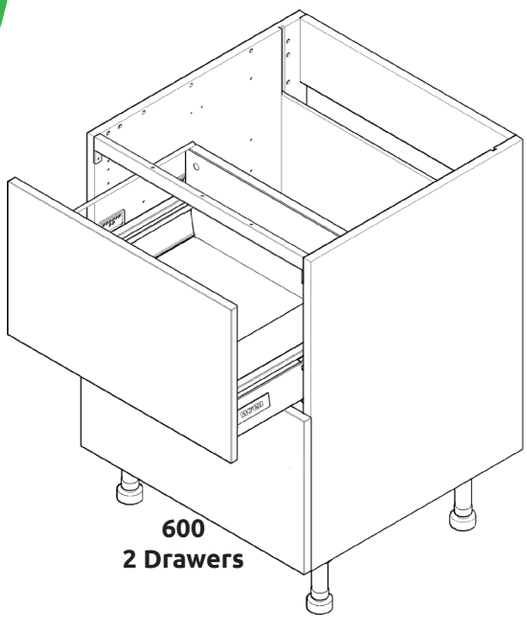

600
2 Drawers

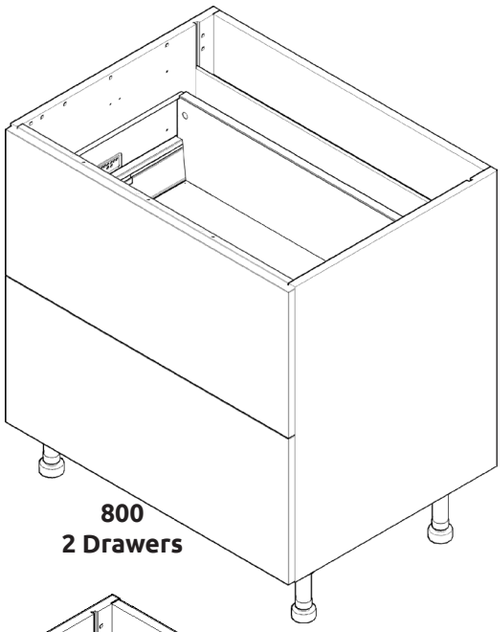

800
2 Drawers

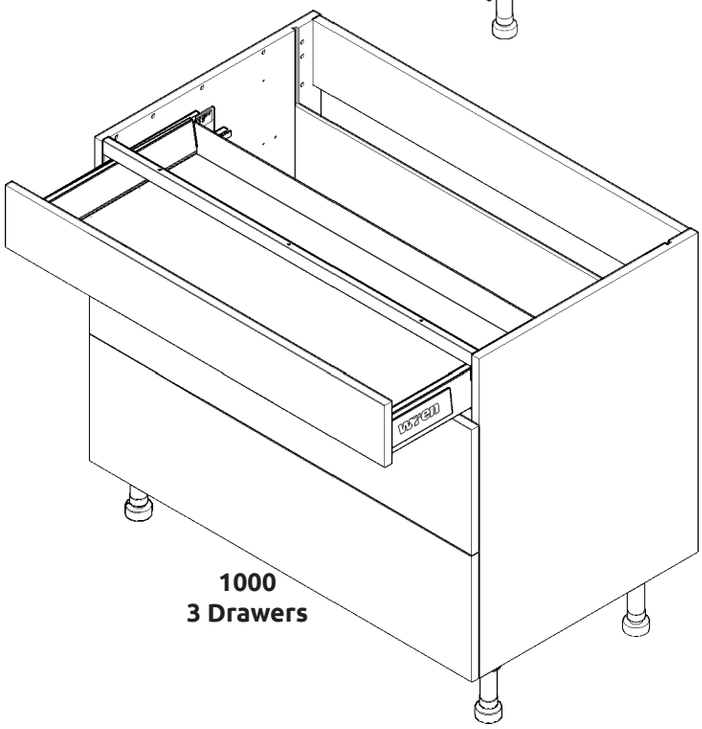

1000
3 Drawers

wren KITCHENS

BASE UNIT

600 - 1000 Hob

2/3 Drawer

Carcass Assembly

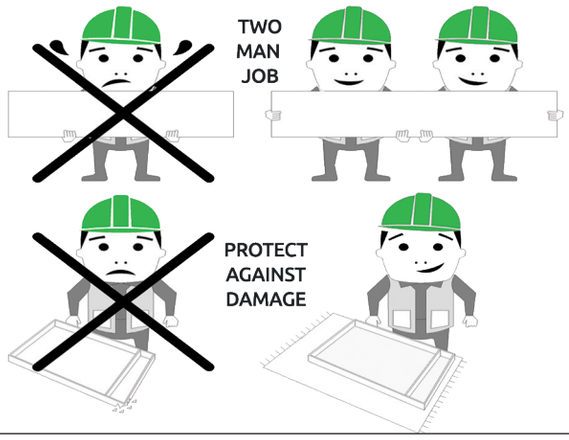

BEFORE YOU START

INSTALLATION SHOULD BE PERFORMED BY A COMPETENT PERSON ONLY.

THIS PRODUCT COULD BE DANGEROUS IF INCORRECTLY INSTALLED

Standard Drawer (Packed Separately)

Fitting Pack Contents

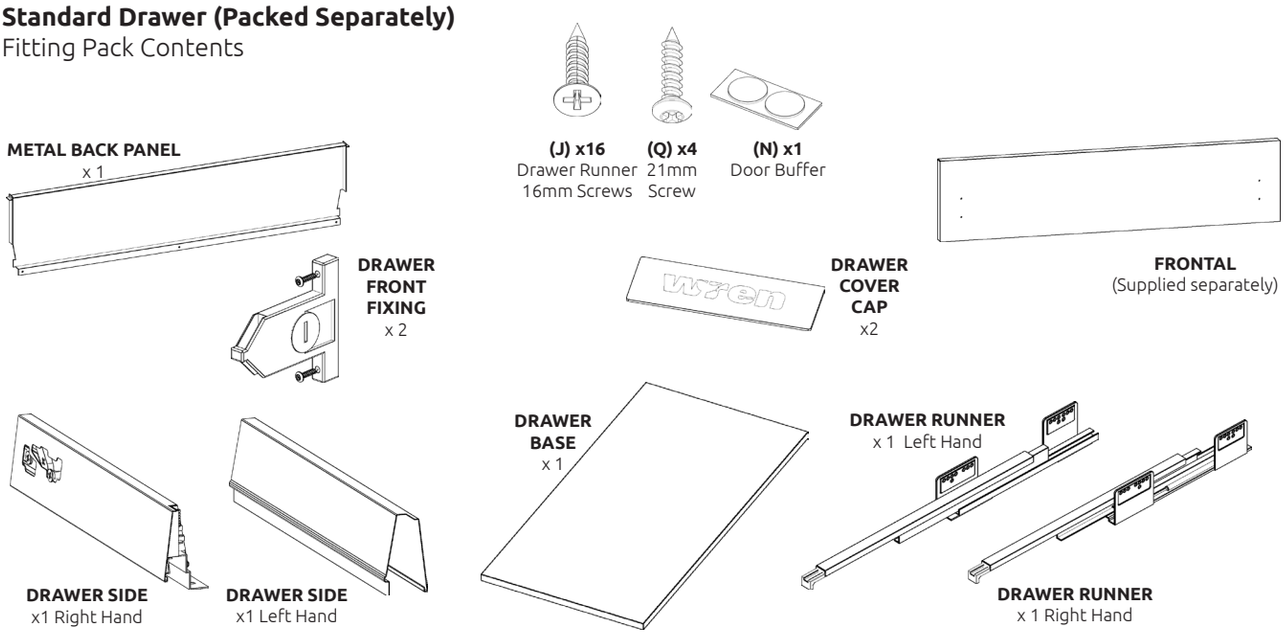

Deep Drawer (Packed Separately)

Fitting Pack Contents

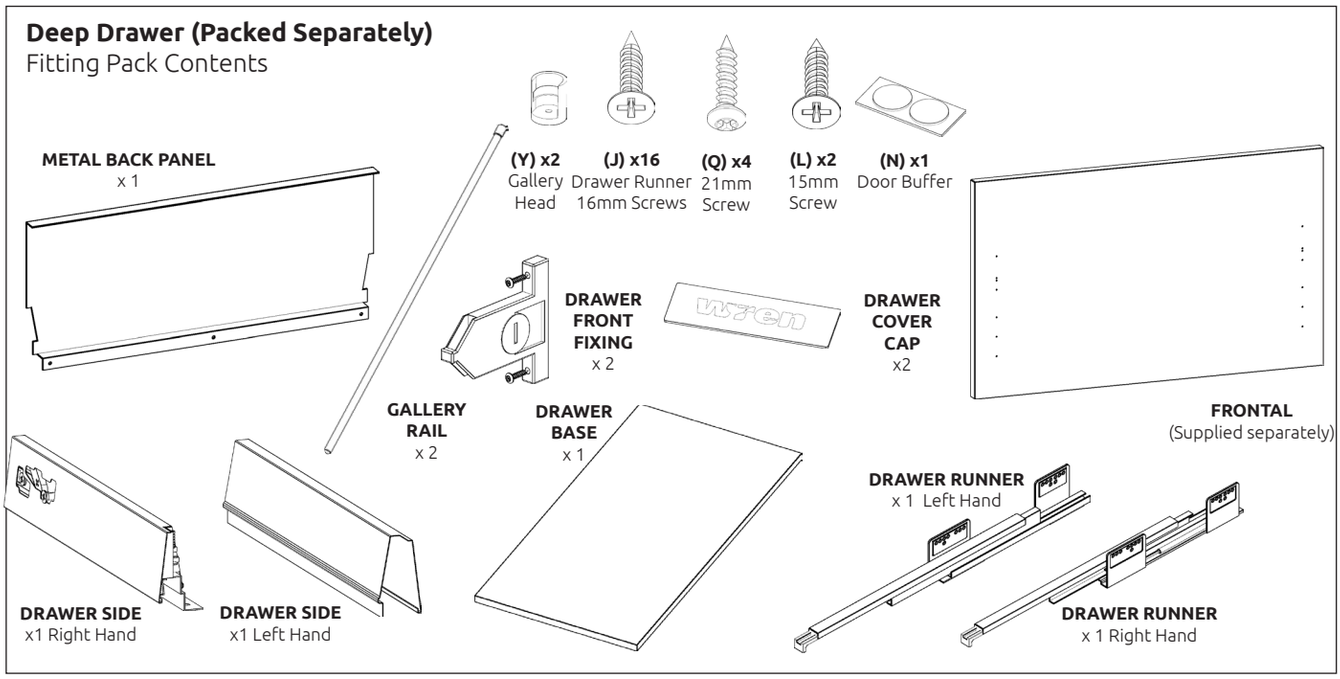

REQUIRED TOOLS

BASE UNIT

600 - 1000 Hob

2/3 Drawer

Standard Drawer Assembly

Step 1.

Secure drawer base to drawer side using 4 x 16mm drawer runner screws **(J)** in holes provided.

Seat the edge of drawer base tight into corner of casing, as shown.

The decorative face of drawer base to be positioned as shown.

Repeat step 1 so both drawer sides are attached to drawer base.

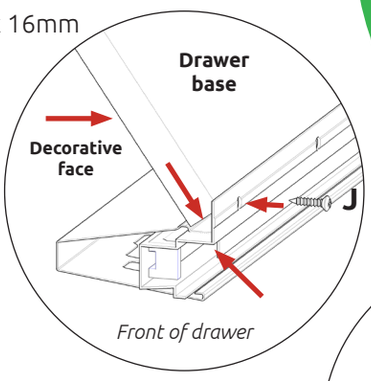

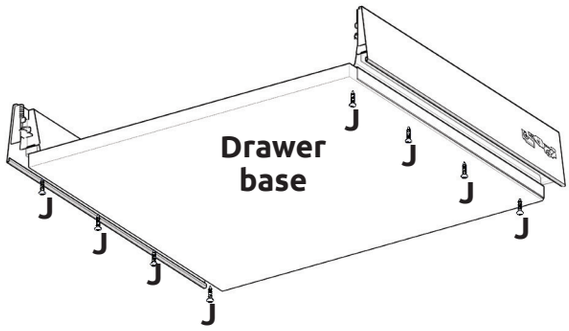

Step 2.

Clip on metal back panel to drawer base & drawer sides.

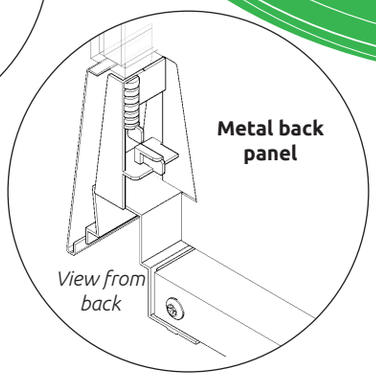

Step 3.

Screw back panel in position using 2 x 16mm screws **(J)** to drawer base in holes provided.

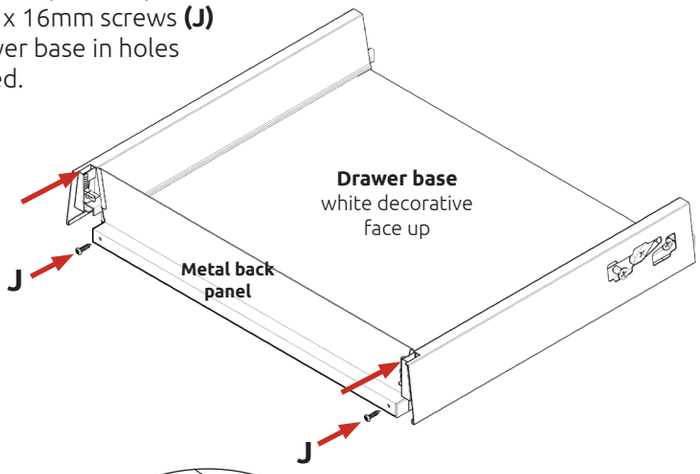

Step 4.

Frontal Attachment
Secure drawer side fixing clips using 2 x 21mm screws (Q) in pilot holes provided as shown.

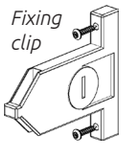

Drawer Frontal Adjustment

Step 5.

Draw Adjustment
Screw point **1** as shown to adjust drawer frontal right & left.

Screw point **2a** as shown to adjust drawer frontal up & down.

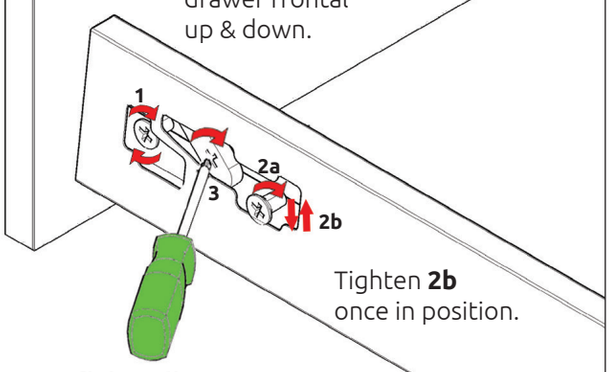

Tighten **2b** once in position.

Releasing **fixing clip.** Screw point **3** whilst applying downward pressure as shown to release.

View on side of drawer side

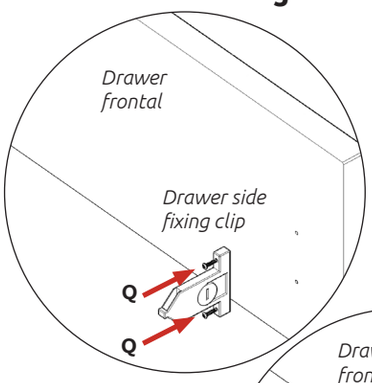

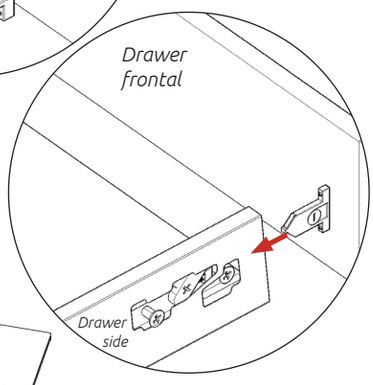

Drawer Cover Cap

Step 6.

Fit Drawer Cover Caps over drawer side adjustment.

BASE UNIT

600 - 1000 Hob

2/3 Drawer

Deep Drawer Assembly

Step 1.
Secure drawer base to drawer side using 4 x 16mm drawer runner screws **(J)** in holes provided.
Seat the edge of drawerbase tight into corner ofcasing, as shown.
The decorative face of drawer base to be positioned as shown.

Repeat step 1 so both drawer sides are attached to drawer base.

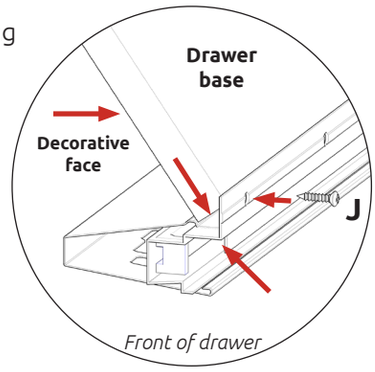

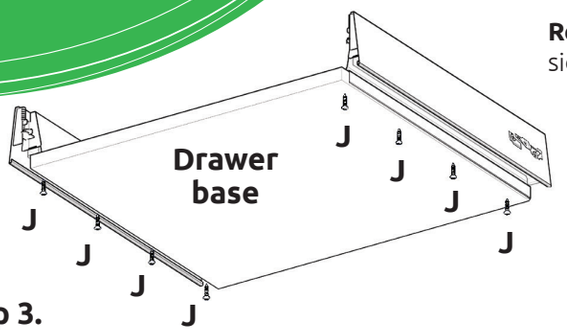

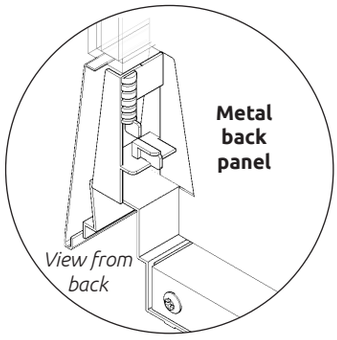

Step 2.
Clip on metal back panel to drawer base & drawer sides.

Step 3.
Screw back panel in position using 2 x 16mm screws **(J)** to drawer base in holes provided.

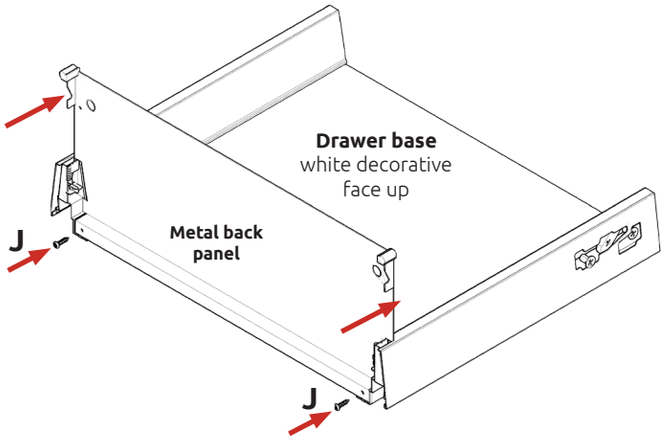

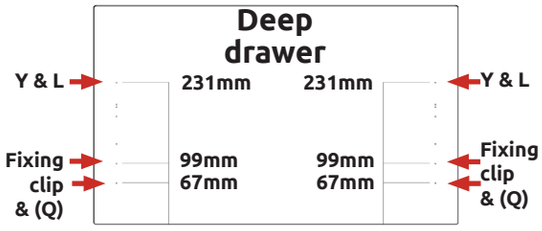

Step 4.
Frontal Attachment
Secure **drawer side fixing clips & Gallery Head (Y)** using 2 x 21mm **screws (Q)** in pilot holes provided as shown.

Gallery Head

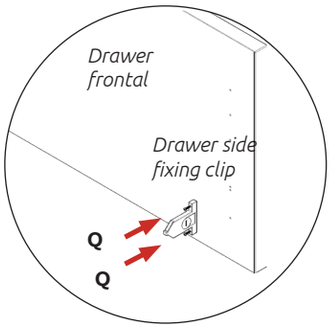

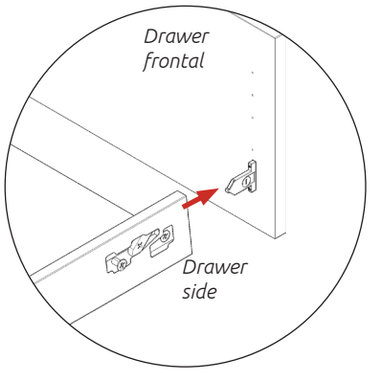

Drawer Frontal Adjustment

Step 5.
Draw Adjustment
Screw point **1** as shown to adjust drawer frontal right & left.

Screw point **2a** as shown to adjust drawer frontal up & down.

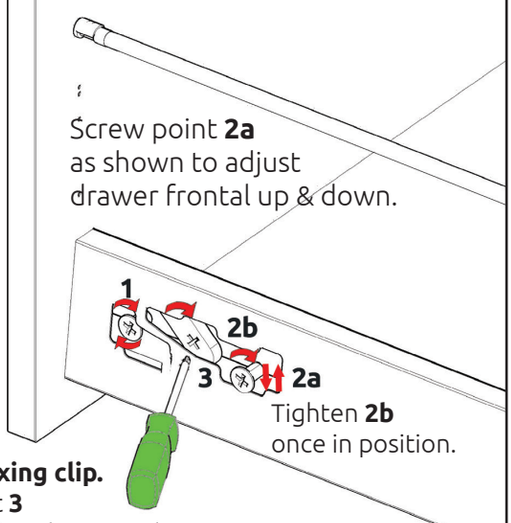

Tighten **2b** once in position.

Releasing **fixing clip.**
Screw point **3** whilst applying downward pressure as shown to release.

View on side of drawer side

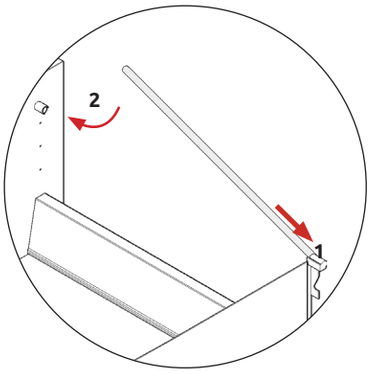

Step 6.
Fit Gallery Rail into the top corners of Metal BackPanel.
Locate front end of the Gallery Rail into the opening of the gallery Head, which is secured to the frontal as shown

Drawer Cover Cap

Step 7.
Fit Drawer Cover Caps over drawer side adjustment.

BASE UNIT

600 - 1000 Hob

2/3 Drawer

Carcass Assembly

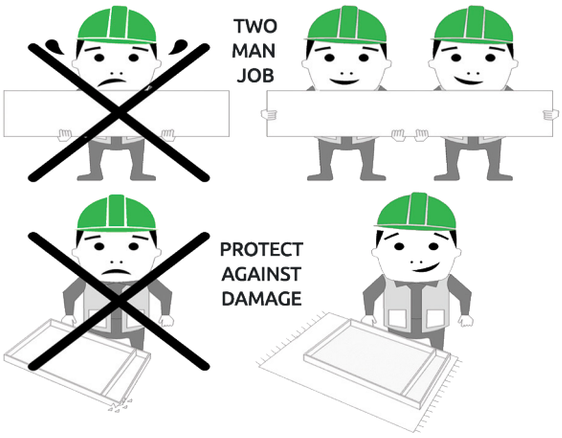

BEFORE YOU START

INSTALLATION SHOULD BE PERFORMED BY A COMPETENT PERSON ONLY.

THIS PRODUCT COULD BE DANGEROUS IF INCORRECTLY INSTALLED

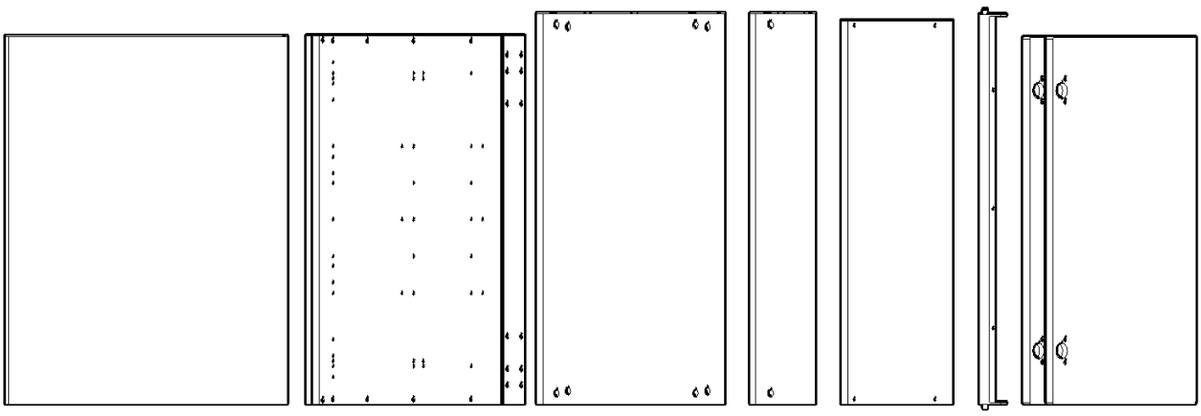

Panel A
x1 Back Panel

Panel B
x2 End Panel

Panel C
x1 Base Panel

Panel E
x1 Rail

Shelf
x1

Sink Rail
x1

Frontal
(Packed separately)
x1 or 2 as Req'd

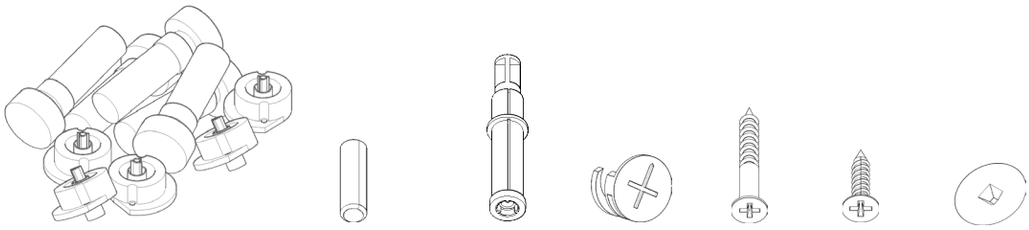

Legs
x4 or 5
as req'd

(F) x8
Wooden Dowel

(G) x6
Cam Dowel
(Expanding)

(H) x6
Cam Lock

(K) x4
30mm
Screw

(L) x12
15mm
Screw

(M) x4
Cover
Cap

REQUIRED TOOLS

BASE UNIT

600 - 1000 Hob
2/3 Drawer

Assembly Guide

Drawer runner bracket screw position

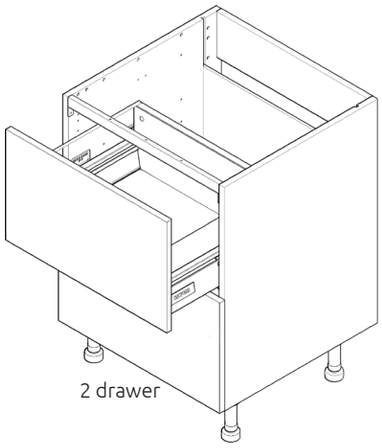

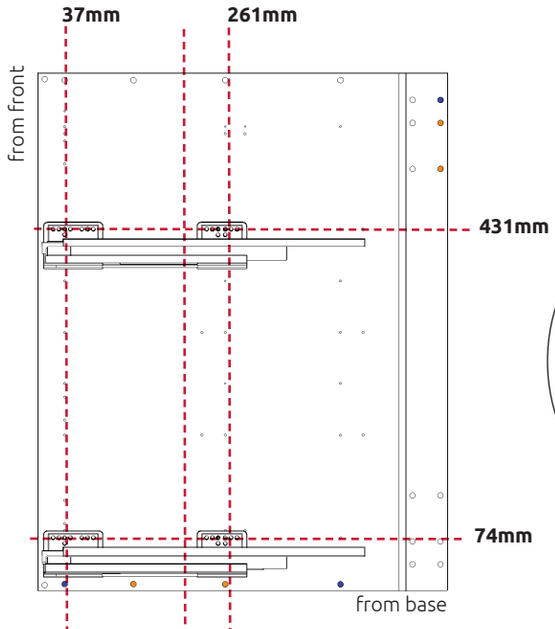

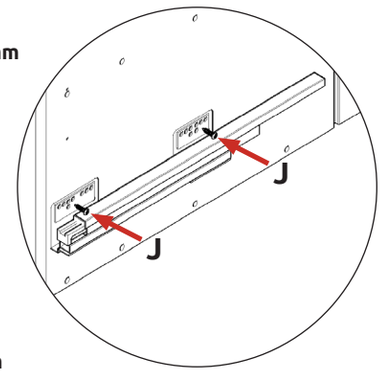

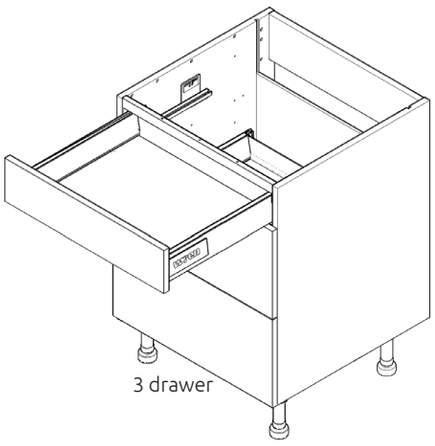

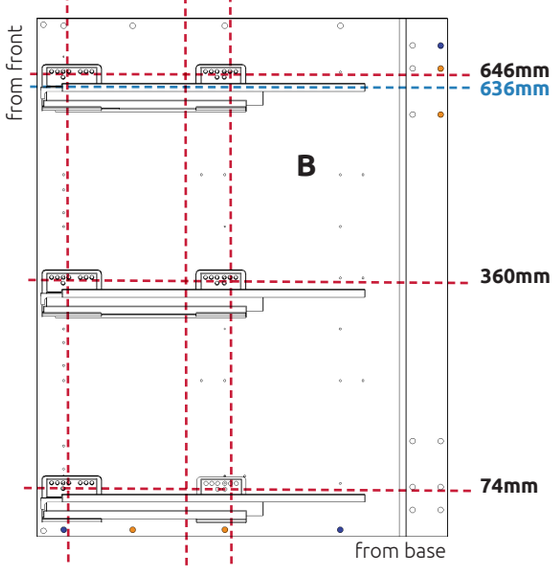

Step 1.

To attach drawer runner screw into end panels **(B)** using 2 x 16mm screws **(J)** per drawer rail, into pilot holes provided, 3rd hole from front, as shown.

In the case of a 140 Dummy drawer, utilise secondary drilling (**blue**) to secure fixing clips.

BASE UNIT

600 - 1000 Hob
2/3 Drawer

Assembly Guide

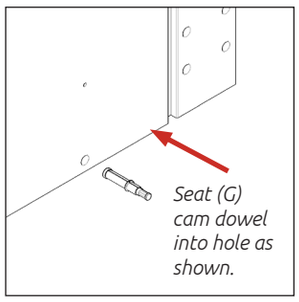

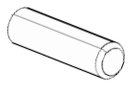

Step 2.
Seat dowel **(F)** into holes in both end panels **(B)** as shown.

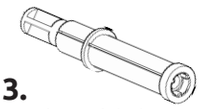

Step 3.
Seat cam dowel **(G)** into holes in both end panels **(B)** as shown.

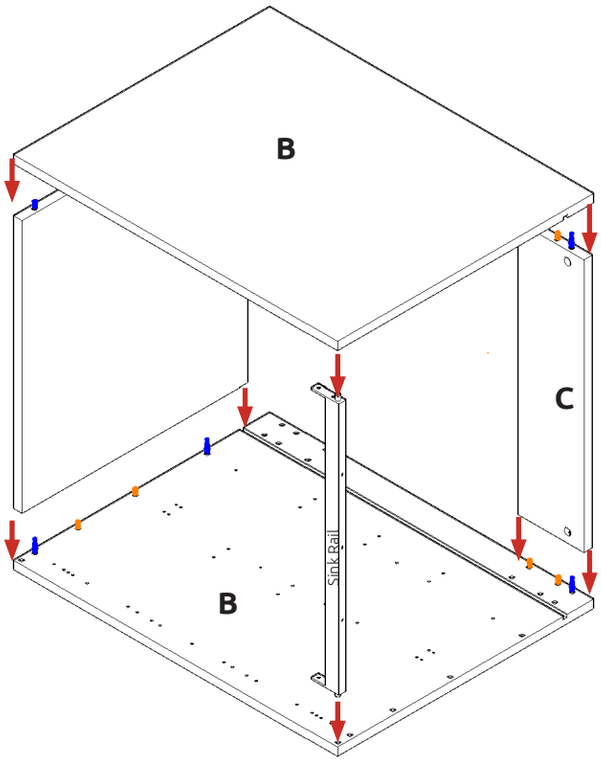

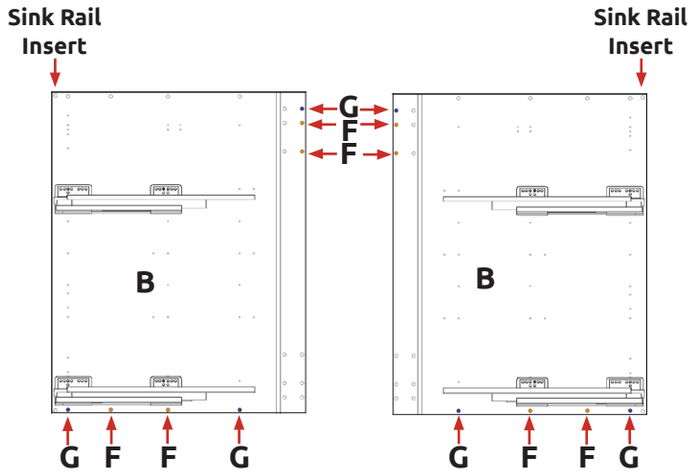

Dowel (F), Cam Dowel (G)
& Sink Rail Screw
Location detail

Step 4.
Attach panels **(C)** & **(E)** to panels **(B)**, using dowels **(F)** (**orange**) and cam dowel **(G)** & cam lock **(H)** (**blue**) in positions shown.
Insert sink rails as shown & secure with 2 x 15mm screws **(L)** into panels **(B)**.

All **Cam Locks (H)** are to be positioned facing the outside of the unit carcass, for ease of tightening.

Do **NOT** use power tools with cam dowel **(G)** or cam lock **(H)**

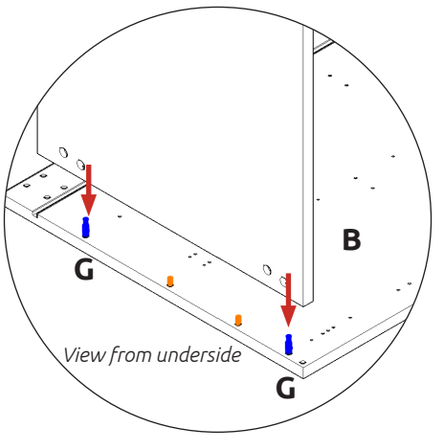

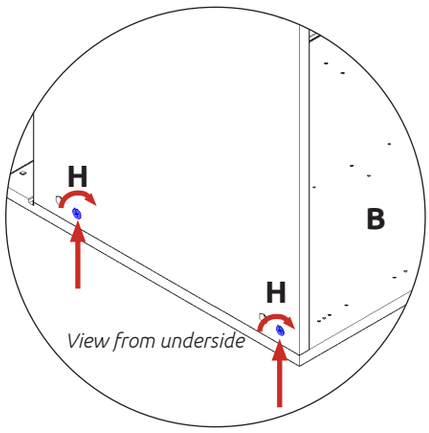

Step 5.
Join panels **(C)** to **(B)**.
Insert cam lock **(H)**.
Do **NOT** tighten until Step 6.

BASE UNIT

600 - 1000 Hob
2/3 Drawer

Assembly Guide

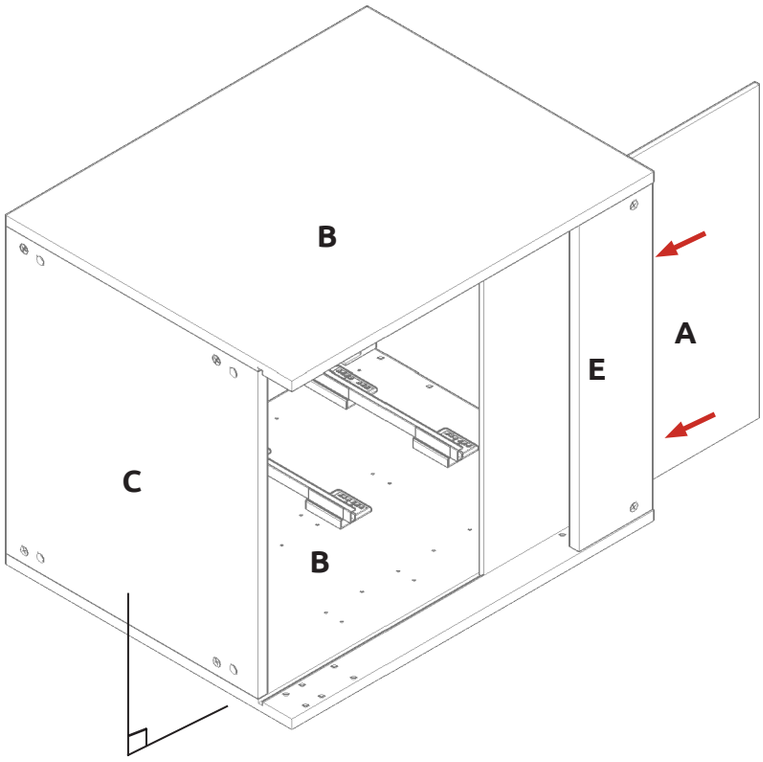

Step 6.
Slide back panel **(A)** into groove of end panels **(B)**.

The back Panel **(A)** is to be modified accordingly to suit Customer Requirements,prior to inserting into cabinet. for 1000 width cabinets, the Back panel.

Once back panel **(A)** is in position, ensure the panel is flush & square with bottom of end panels **(B)**.

Step 7.
Hand tighten all cam locks **(H)**, this will expand cam dowels **(G)** and tighten the unit together.

600 Carcase used for example

Step 8.
Ensure carcass is square. Secure back panel **(A)** with 3 or 4 x 30mm screws **(K)** equally spaced at the bottom of back panel **(A)** into base panel **(C)**, as shown.

Ensure you screw into the centre of the base panels **(C)** (9mm from the edge).

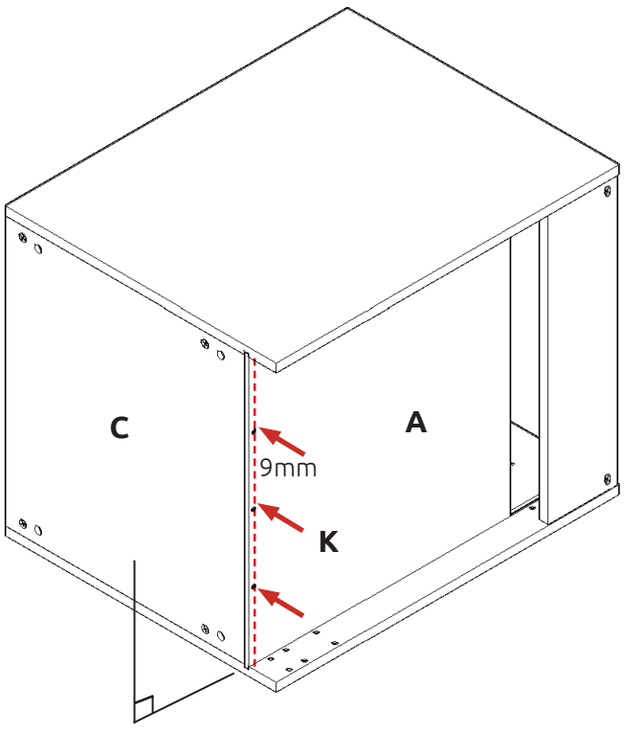

BASE UNIT

600 - 1000 Hob
2/3 Drawer

Assembly Guide

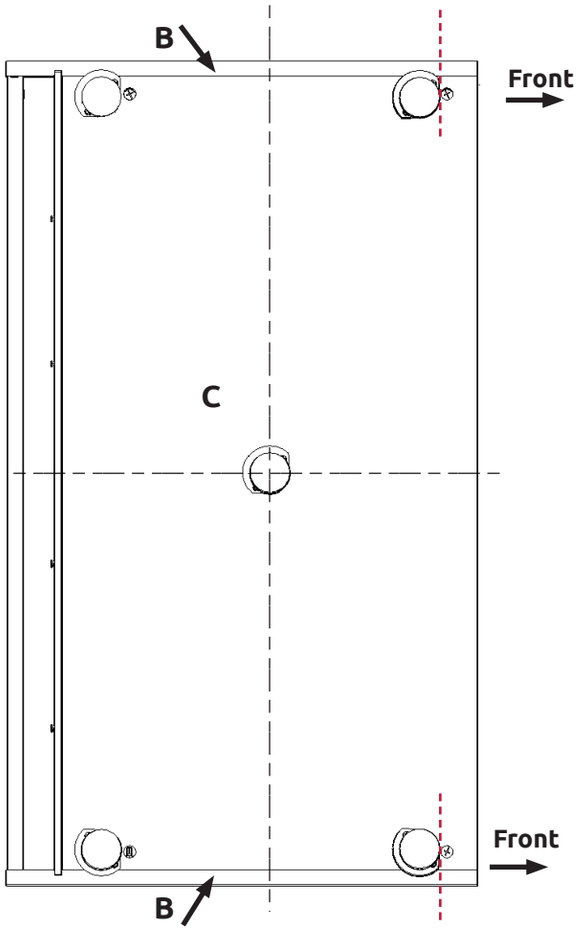

Leg position diagram
1000 Carcase used for example

Step 9.
Secure each of the legs into place with 2 x 15mm screws **(L)**.
600-800 Width Cabinets, 4 legs
1000 with Cabinets, 5 legs

Ensure legs are rotated as shown so that part of it is supporting the end panels **(B)**.

Front legs should have flat edge to the front.

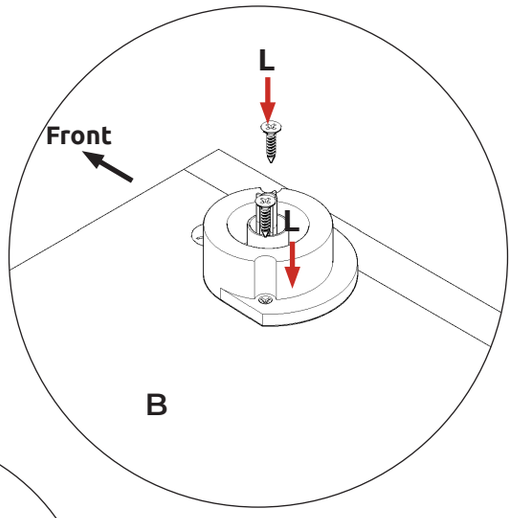

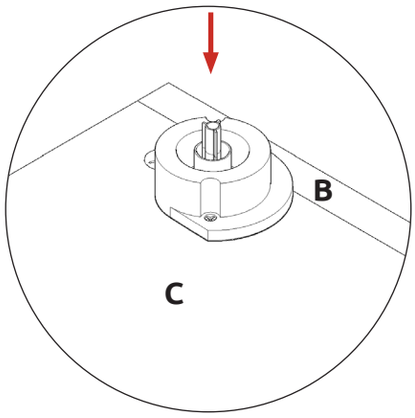

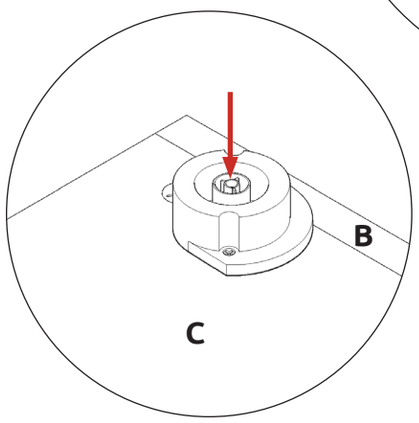

Step 10.
Lightly hit centre peg of leg base with hammer until flush.

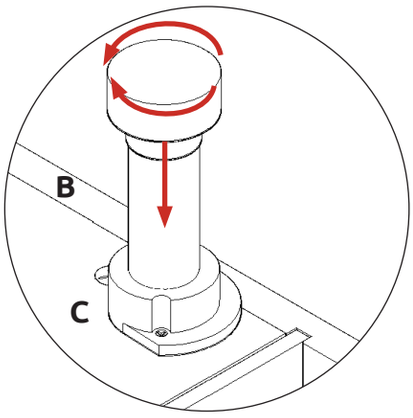

Step 11.
Push leg firmly down into leg base.
Adjust legs to 155mm before turning carcass upright. Once in situ level accordingly.

BASE UNIT

600 - 1000 Hob
2/3 Drawer

Assembly Guide

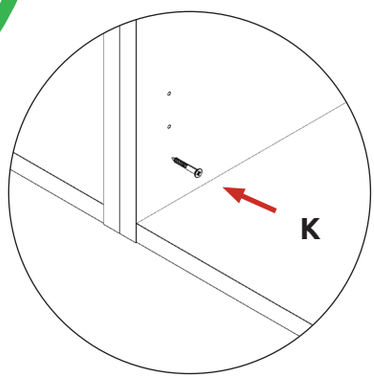

Securing to adjacent units

Screw into any side units using the 30mm screws **(K)** provided to secure to the unit. Screw just to the rear at the top and bottom of both sides of the unit, place a cover cap **(M)** on the head to conceal it.

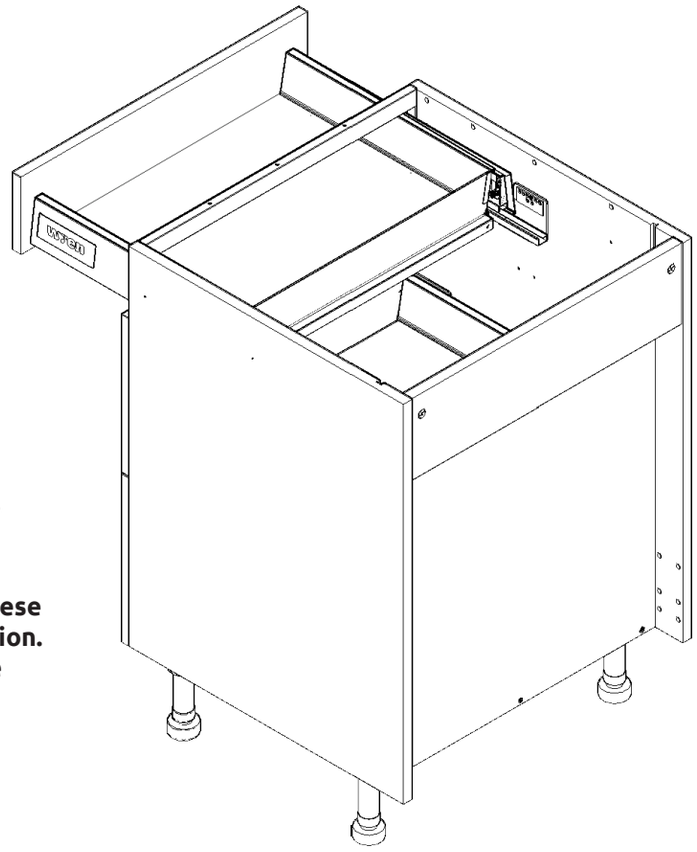

Securing to Wall

Secure unit to wall using 2 Screws. Drill 2 pilot holes through the back rail into the wall and insert wall plugs, tighten the screws.

Screws for attaching to walls are not provided as these vary depending on your wall material and construction. Ensure appropriate fixings for wall construction are used.

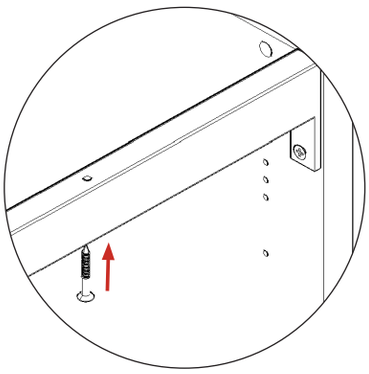

Worktop

Screw up through the front sink rail (and additional rail where applicable) into worktop to secure it in place.

Screws for attaching to worktop are not supplied as these vary depending on worktop material and thickness. Ensure appropriate fixings for attaching worktop are used. Please refer to the specialist worktop supplier if these are required for solid surface worktops.

wren
KITCHENS