10 / 2017

VS CORNERSTONE *L+R*

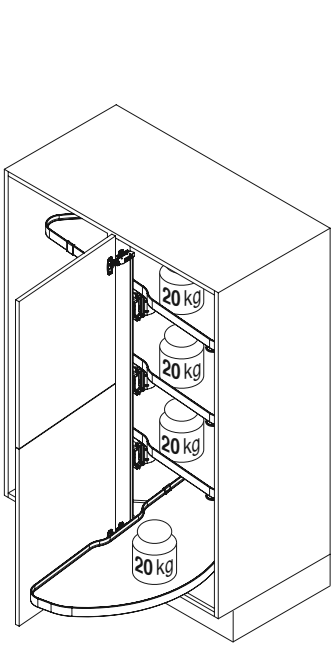

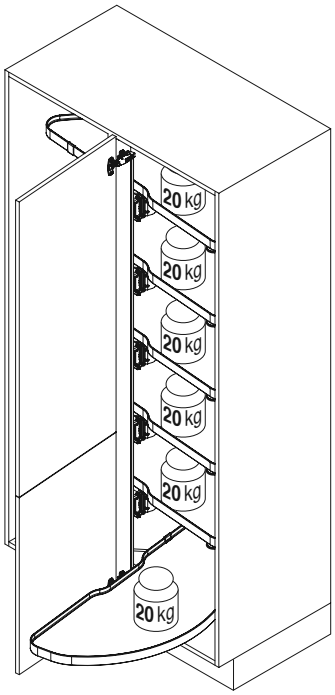

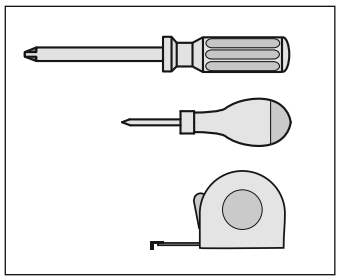

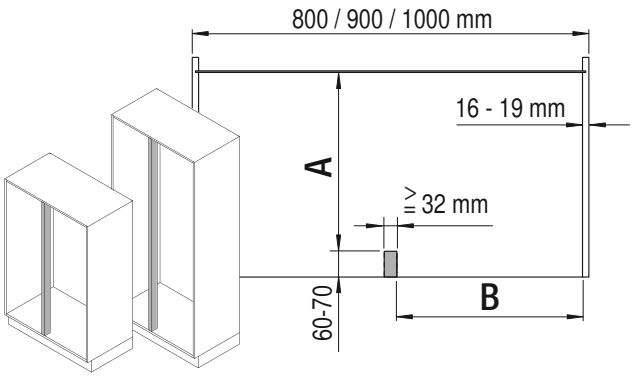

Door	Cabinet width	A	B	C	D
D400	800	≧ 425	≧ 362	≧ 485	≧ 381
D450	900	≧ 425	≧ 412	≧ 485	≧ 431
D500	1000	≧ 425	≧ 462	≧ 485	≧ 481
D600	min. 1000	≧ 425	≧ 562	≧ 485	≧ 581

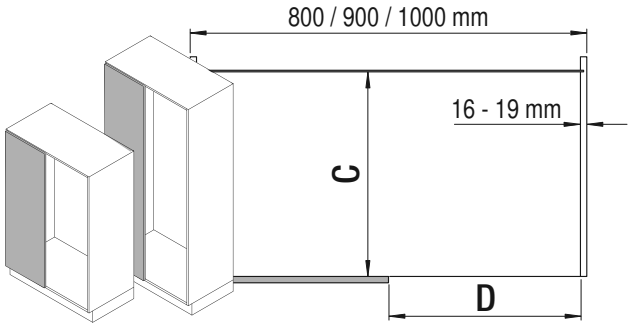

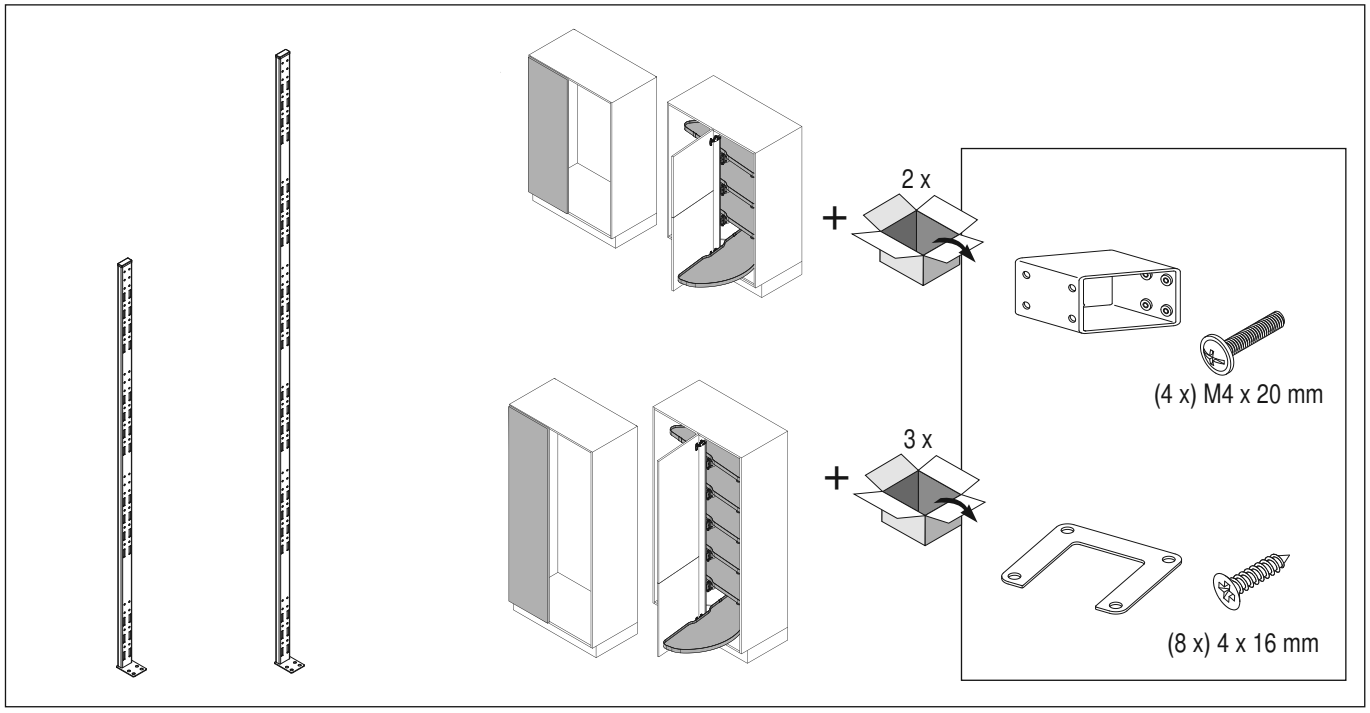

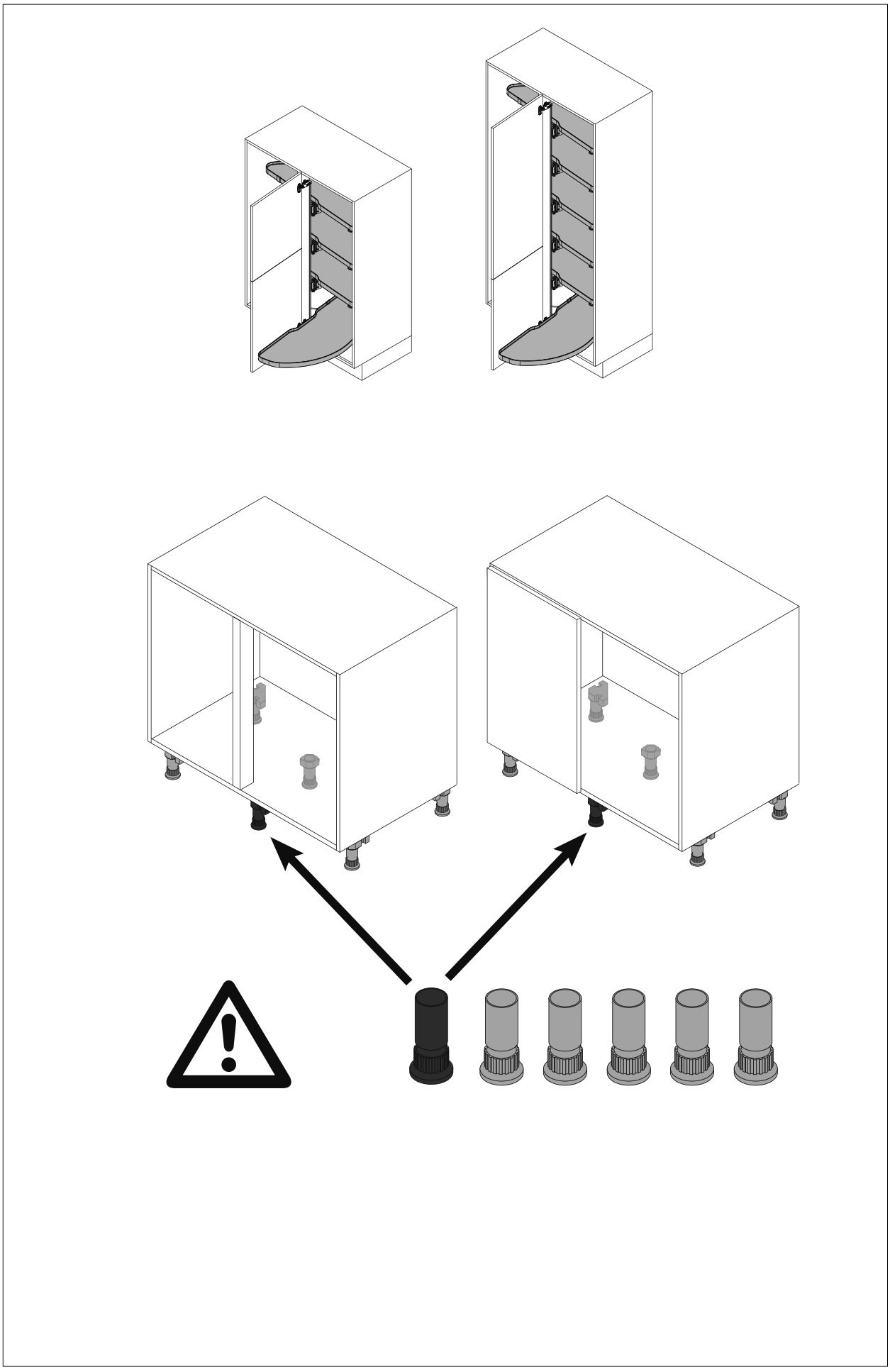

1

A

1.1

0 mm

1.3

1.3

8 x
4 x 40 mm

1.2

1.2

4 x
4 x 16 mm

1.3

1.2

VAUTH SAGEL

1

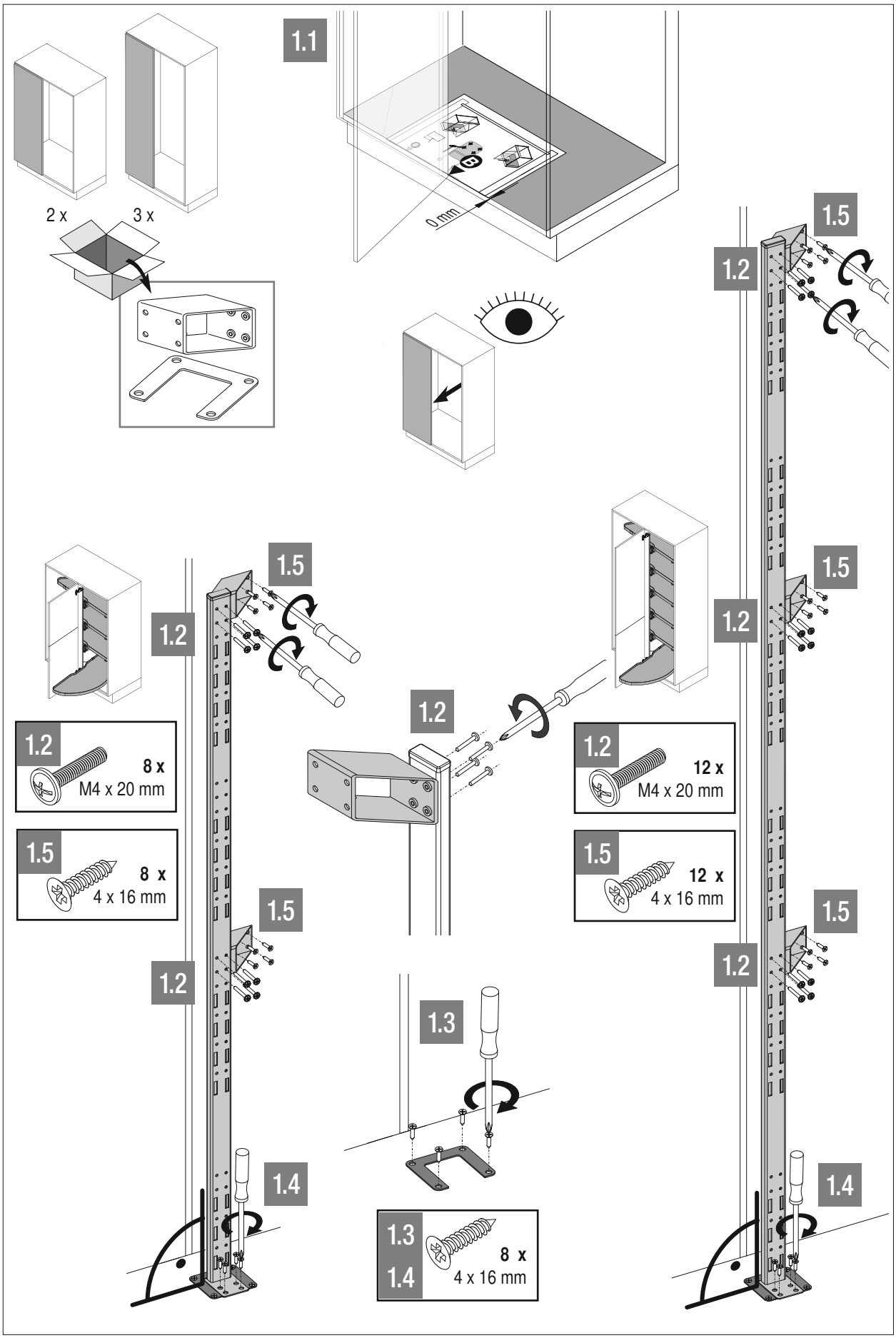

VAUTH-SAGEL ⧹ Neue Straße 27, 33034 Brakel-Erkeln ⧹ Phone: +49 5272 601-01 ⧹ Fax: +49 5272 601-193 ⧹ E-mail: vs@vauth-sagel.com