WALL UNIT

1000 Wall Unit

Assembly Guide

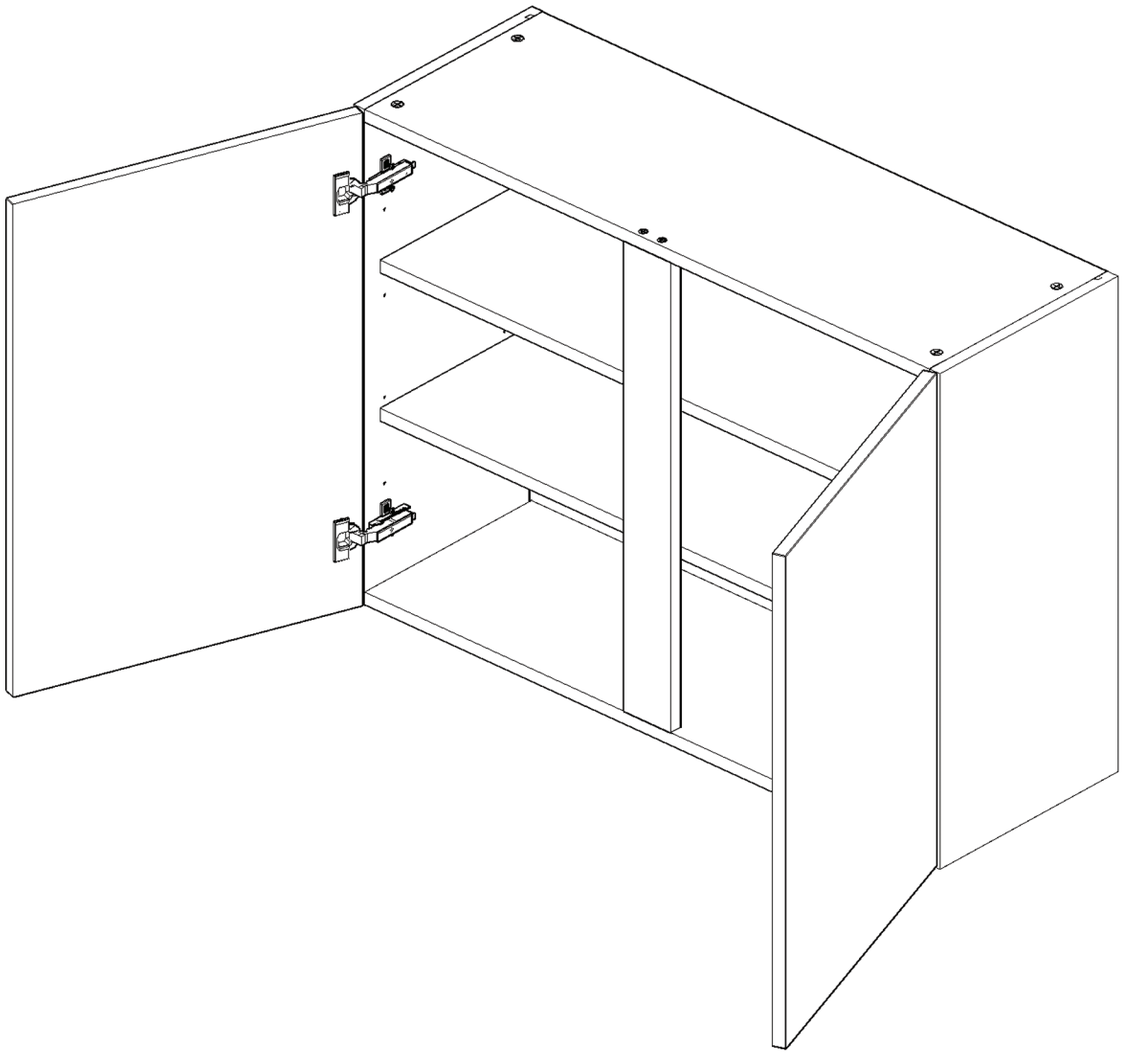

WALL UNIT

1000 Wall Unit

Assembly Guide

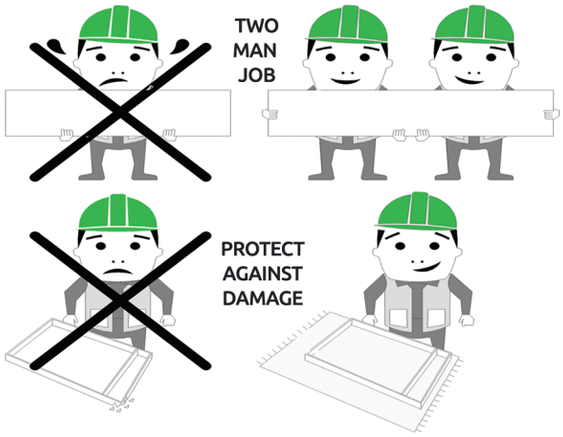

BEFORE YOU START

INSTALLATION SHOULD BE PERFORMED BY A COMPETENT PERSON ONLY.

THIS PRODUCT COULD BE DANGEROUS IF INCORRECTLY INSTALLED

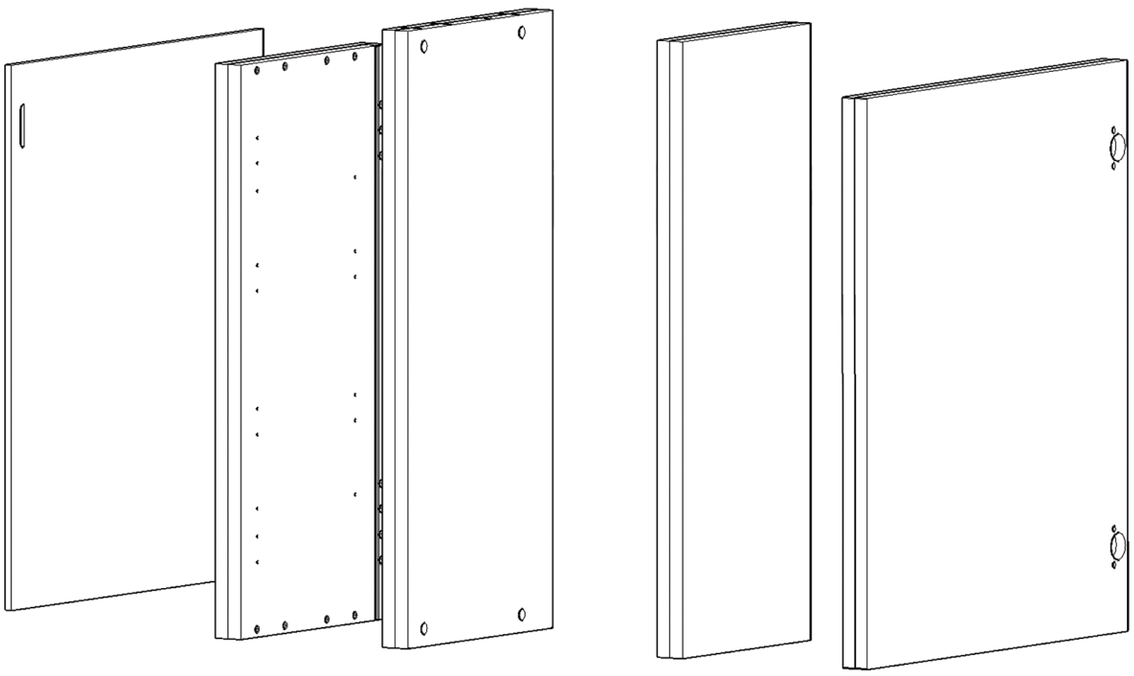

Panel A — **x1** Back Panel

Panel B — **x2** End Panel

Panel C — **x2** Base Panel

Muttin D — **x1**

Shelf — **x2**

Frontal (packed separately) — **x2**

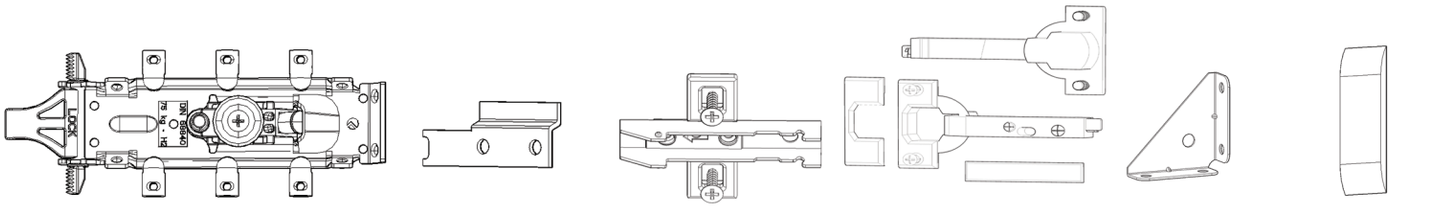

HANGING BRACKET

x2 Inc Screws

HANGING BRACKET PLATE

x2 (Screws NOT included)

HINGE MOUNITNG PLATE

x4 Inc Screws

HINGE

x4 Inc Screws

CORNER GUSSET

x2

Hanging Bracket Cover caps

x2

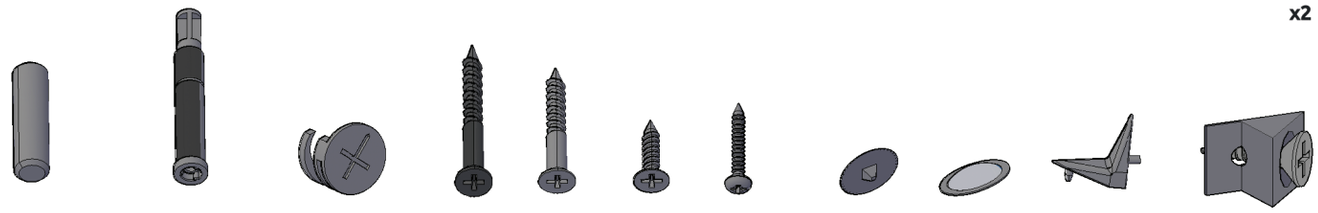

(F) x8 *Wooden Dowel*

(G) x8 *Cam Dowel (Expanding)*

(H) x8 *Cam Lock*

(P) x4 *45mm Screw*

(K) x4 *30mm Screw*

(L) x8 *15mm Screw*

(S) x4 *20mm Screw*

(M) x4 *Cover Cap*

(N) x2 *Door Buffer*

(O) x10 *Shelf Peg Plastic*

(T) x12 *Back Panel Support Clip*

REQUIRED TOOLS

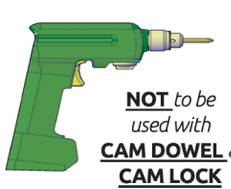

NOT *to be used with* **CAM DOWEL** *&* **CAM LOCK**

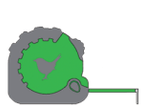

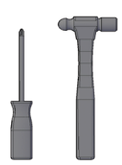

wren KITCHENS

FI.WR.INS.036 | For Internal Use: WKIN00126_FI.PK.FIT.137_WALL_1000_REV3_psd

WALL UNIT

1000 Wall Unit

Assembly Guide

Step 1.
*Dowel **(F)***
*Seat dowel **(F)** into holes in end panel **(B)** as shown.*

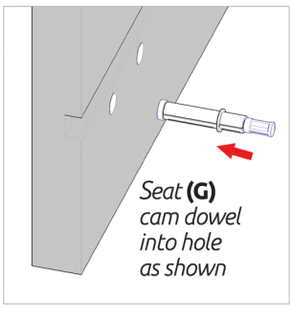

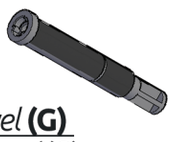

Step 2.
*Cam Dowel **(G)***
*Seat cam dowel **(G)** into holes in both end panels **(B)** as shown.*

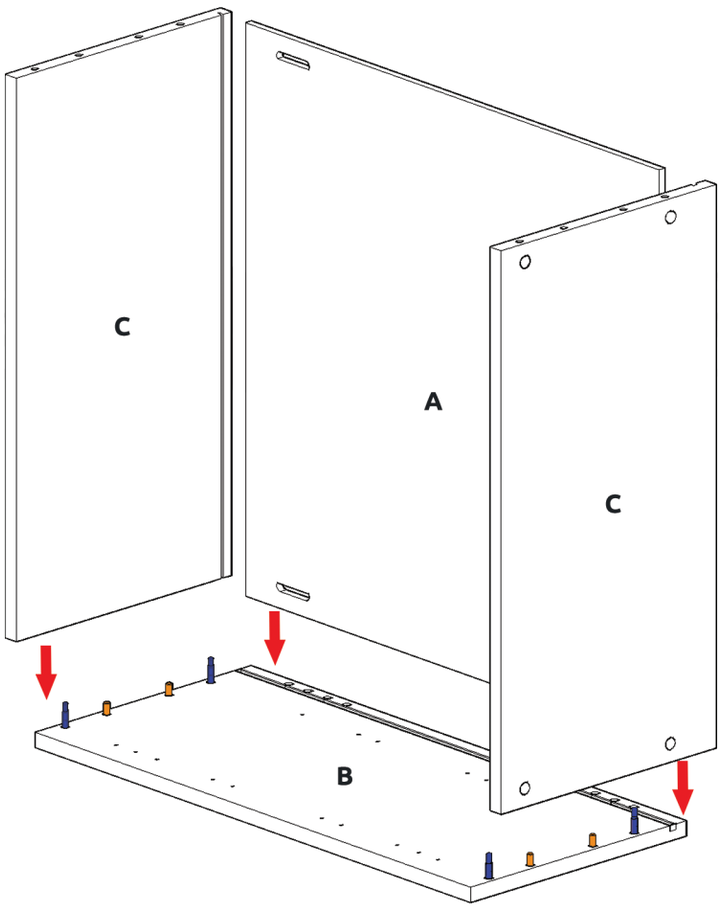

Step 3.
Carcass Construction
*Attach panels x2 **(C)** to panel **(B)**, using cam dowels **(G)** & cam locks **(H)** (in blue), and also using dowels **(F)** (in orange) in positions as shown.*

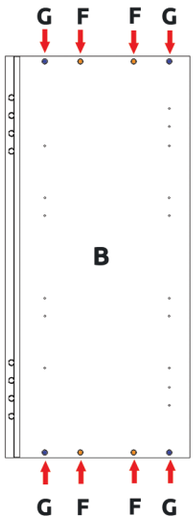

DOWEL (F) & CAM DOWEL (G) LOCATION DETAIL

Step 4.
Carcass Construction
*Slide panel **(A)** into the groove of panel **(B)** & **(C)**.*

*NB. All **CAMLOCKS (H)** are to be positioned facing the outside of the unit carcass, for ease of tightening.*

*Do **NOT** use power tools with* **CAM DOWEL(G)** *&* **CAM LOCK (H)**

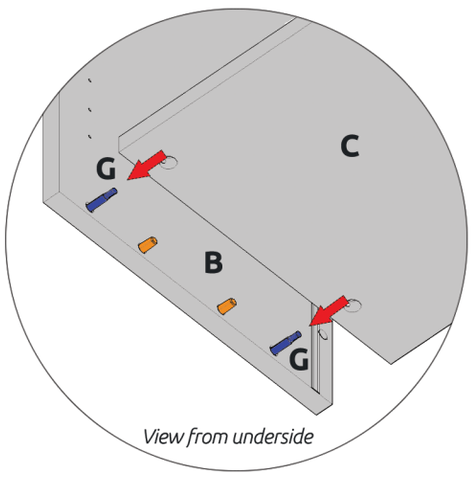

View from underside

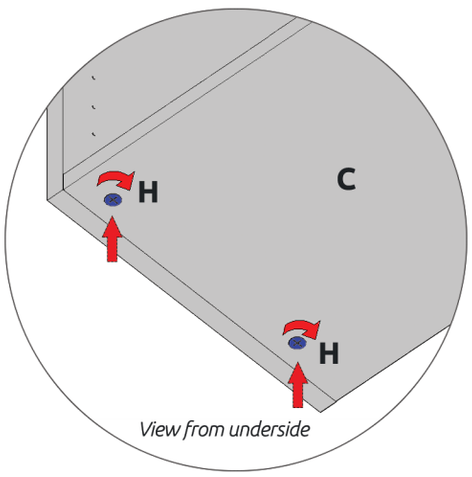

View from underside

Step 5.
*Cam Lock **(H)***
*Insert camlock **(H)**. Hand tighten all CAM LOCKS **(H)**, this will expand CAM DOWELS **(G)** and tighten the unit together.*

FI.WR.INS.036 | For Internal Use: WKIN00126_FI.PK.FIT.137_WALL_1000_REV3_psd

WALL UNIT

1000 Wall Unit

Assembly Guide

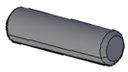

Step 6.
*Dowel **(F)***
Seat dowel **(F)** *into holes in both end panels* **(B)** *as shown.*

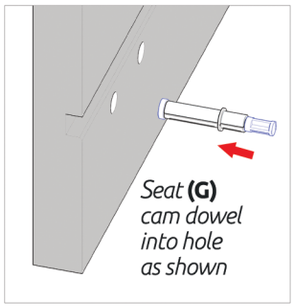

Step 7.
Cam Dowel **(G)**
Seat cam dowel **(G)** *into holes in both end panels* **(B)** *as shown.*

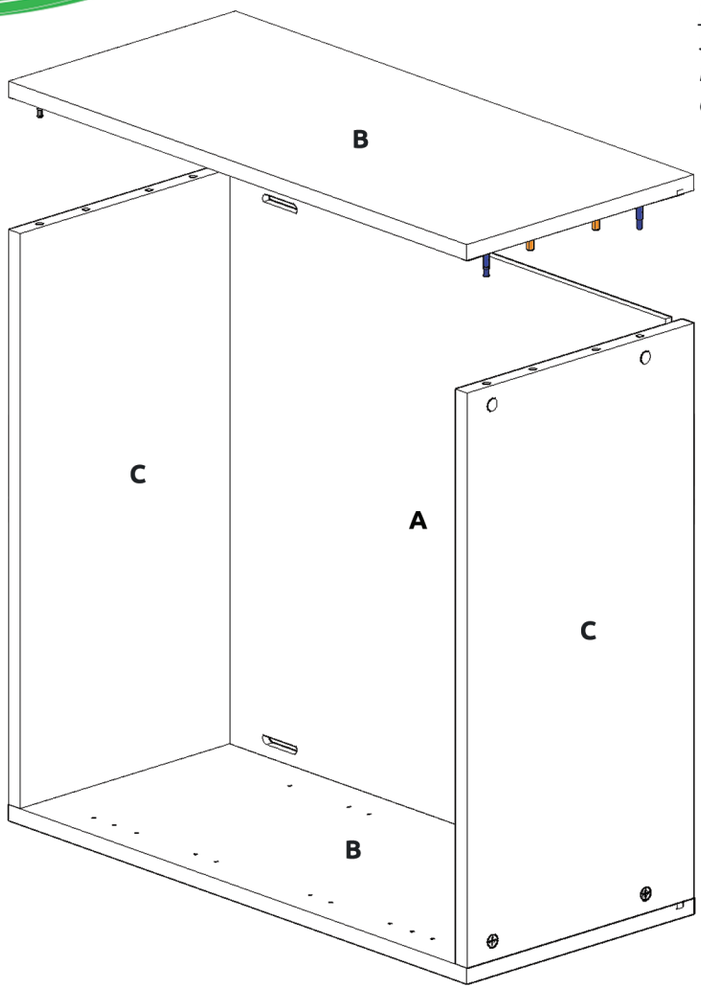

Step 8.
Carcass Construction
Attach panel **(B)** *to panels* **(C)** *using cam dowel* **(G)** *& cam lock* **(H)** *(in blue), and also using dowels* **(F)** *(in orange) in positions as shown. Ensure panel* **(A)** *is seated into the groove of panel* **(B)**.

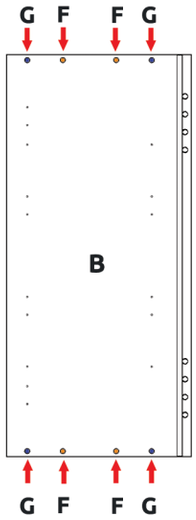

DOWEL (F) & CAM DOWEL (G) LOCATION DETAIL

NB. All **CAM LOCKS (H)** *are to be positioned facing the outside of the unit carcass, for ease of tightening.*

Do **NOT** *use power tools with* **CAM DOWEL(G)** *&* **CAM LOCK (H)**

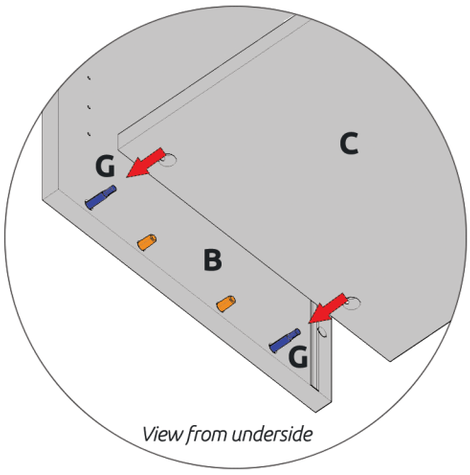

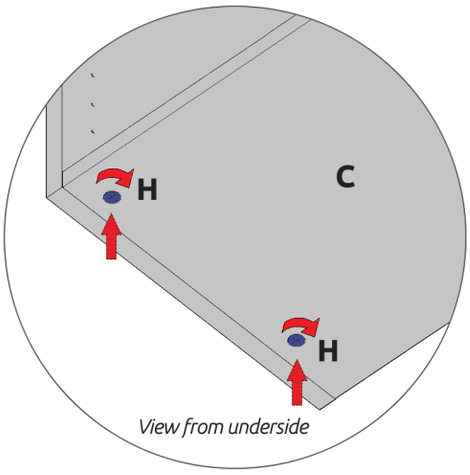

Step 9.
Cam Lock **(H)**
Insert cam lock **(H).**
Hand tighten all CAM LOCKS **(H)**, *this will expand CAM DOWELS* **(G)** *and tighten the unit together.*

WALL UNIT

1000 Wall Unit

Assembly Guide

Step 10.
Join muntin panel **(D)**, *Both panels* **(C)**
using 4 x 45mm screws **(P)** *as shown.*

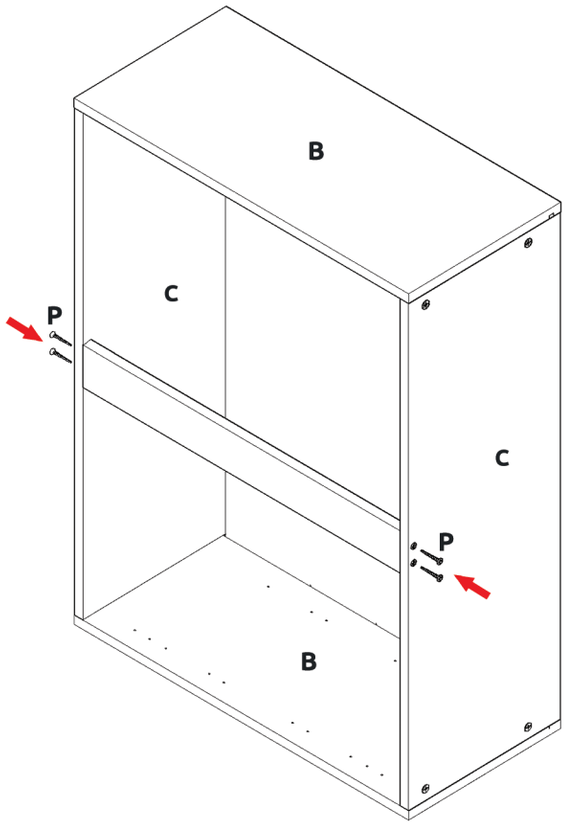

Step 11.
Ensure carcass is square.

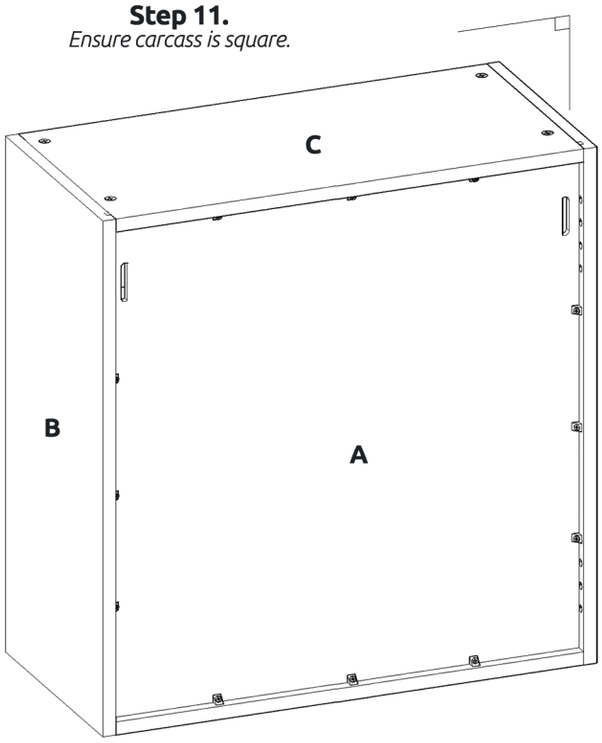

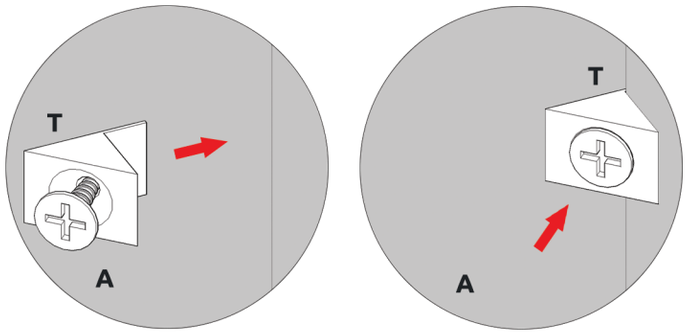

Step 12.
Backpanel Clips
Slide the back panel clips **(T)**
into the groove of both panels **(B)**.
The back panel clips **(T)** *should be evenly spaced*
as shown and postioned to allow the
hanging bracket and corner gussets to be fitted.
Once in place, tighten screw.

Step 13.
Hing Mouting Plates
Attach ***hinge mounting plates***
onto end panels ***(B)***
in locations shown using
8 x 15mm screws ***(L)***

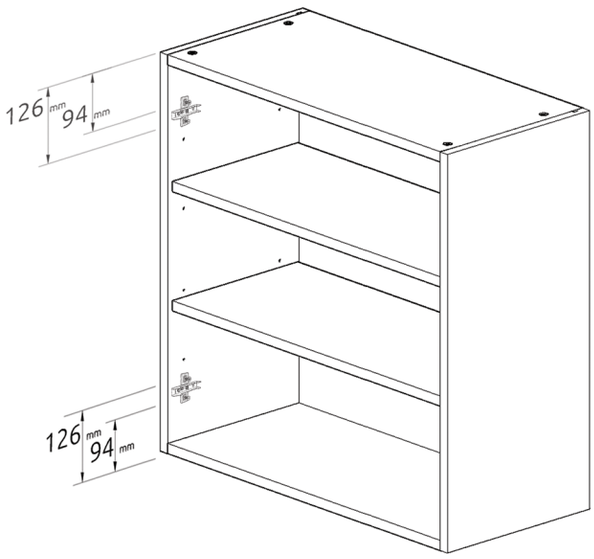

WALL UNIT

1000 Wall Unit

Assembly Guide

Step 14.

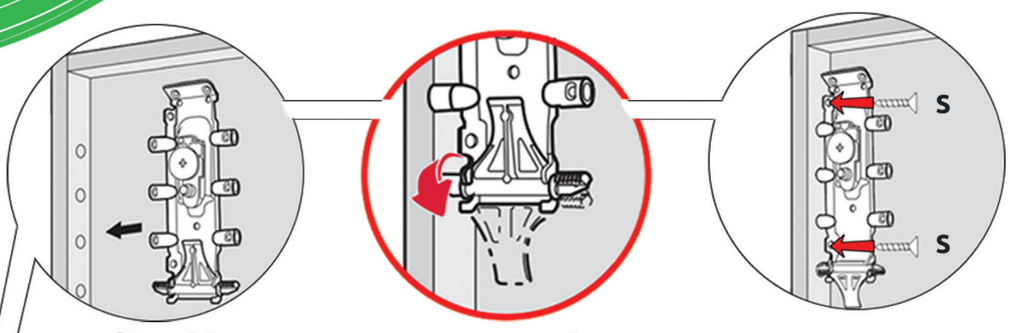

Step 14a.
Insert **HANGING BRACKET** *into pre-drilled holes*

Step 14b.
Rotate locking lever 180 degrees

Step 14c.
Secure with provided 2 x 20mm screws **(S)** *per bracket*

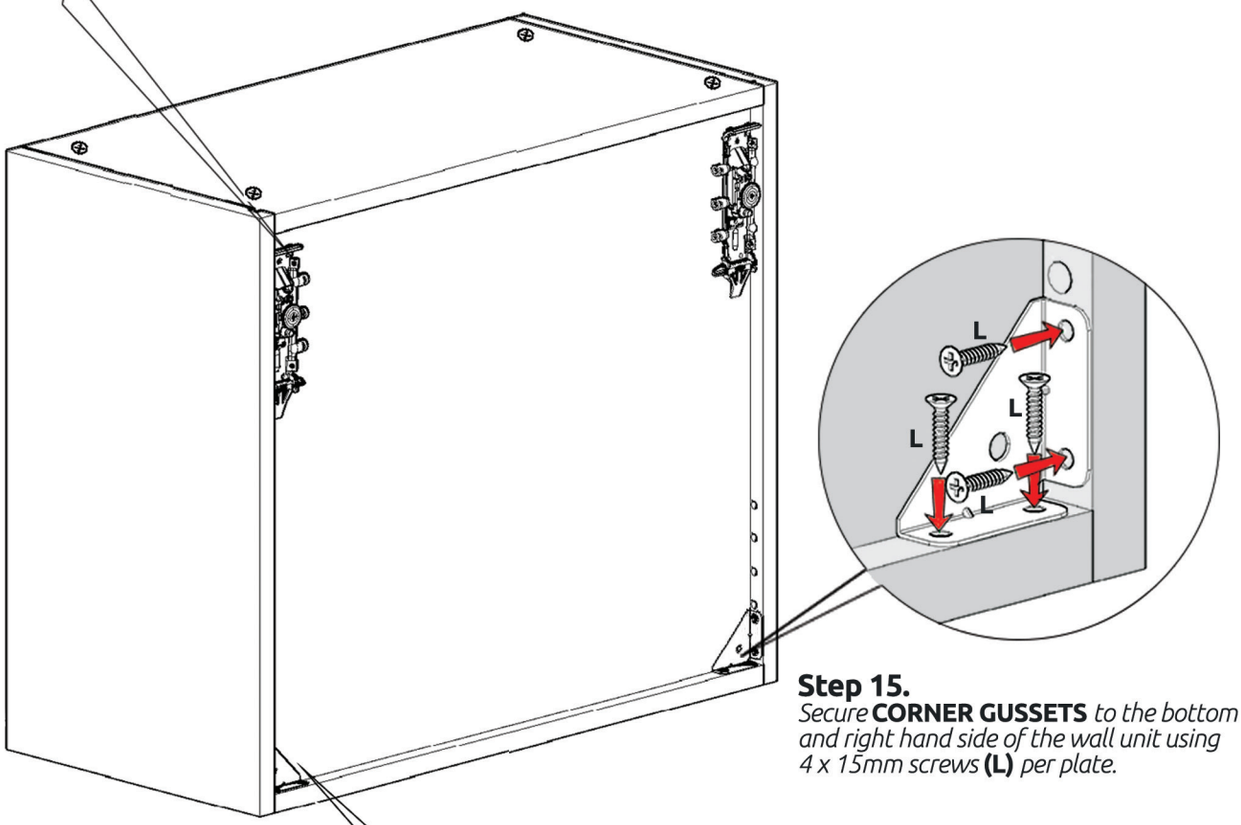

Step 15.
Secure **CORNER GUSSETS** *to the bottom left and right hand side of the wall unit using 4 x 15mm screws* **(L)** *per plate.*

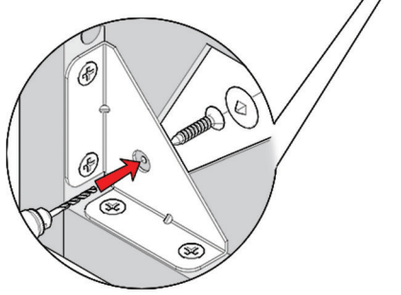

Step 16.
Drill a small pilot hole through the centre of the **CORNER GUSSETS**. *Use this hole at the end of the process to screw through and into the wall. Cover the screw heads using the cover caps* **(M)** *provided.*
Screws for fixing to walls are not provided as these vary depending on your wall material and construction. Ensure appropriate fixings for wall constructions are used.

wren KITCHENS

FI.WR.INS.036 | For Internal Use: WKIN00126_FI.PK.FIT.137_WALL_1000_REV3_psd

WALL UNIT

1000 Wall Unit

Assembly Guide

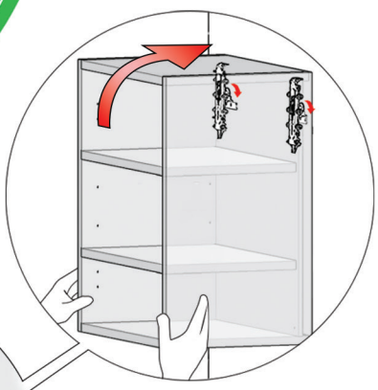

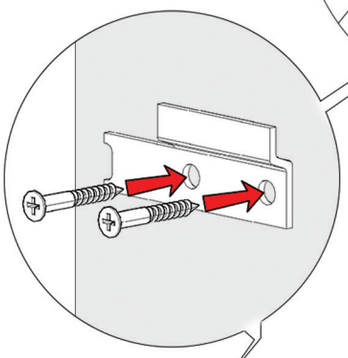

Step 16.
Measure appropriately and attach the 2 x **hanging bracket plates** *onto the wall screwing through the provided holes into your wall. Screws for fixing to walls are not provided as these vary depending on your wall material and construction. Ensure appropriate fixings for wall construction are used. Hang the cabinet using the brackets to hook onto the plate as shown above.*

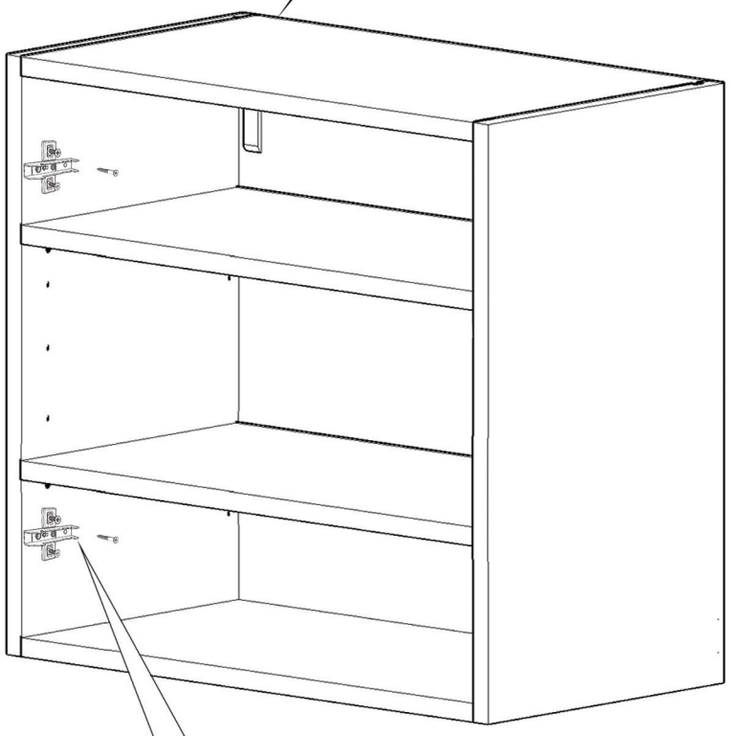

Step 17a.
Rotate the screw clockwise to move the cabinet up. Anti-clockwise for down.

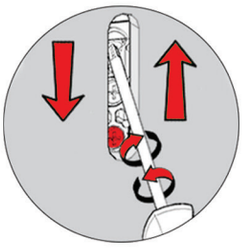

Step 17b.
Adjust the depth using centre screw.

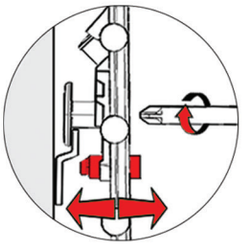

Step 17c.
Screw the red screw until it touches the plate to lock in position.

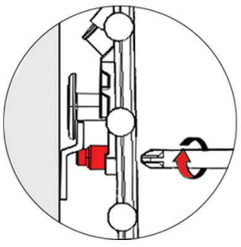

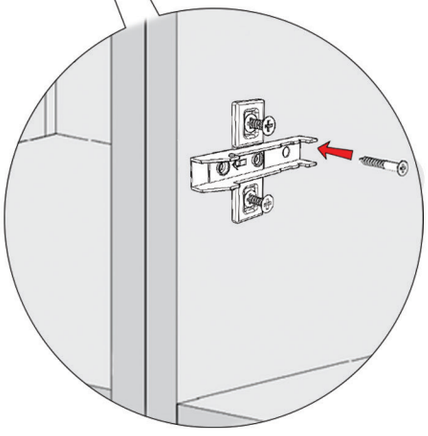

Step 18.
Screw into any side units using the provided 4x 30mm screws **(K)** *to secure the unit. Screw just to the rear of the hinge plate then place a cover cap on the head to conceal it.*

wren KITCHENS

FI.WR.INS.036 | For Internal Use: WKIN00126_FI.PK.FIT.137_WALL_1000_REV3_psd

WALL UNIT

1000 Wall Unit

Assembly Guide

Step 19.
Insert hinge in top & bottom holes as shown.

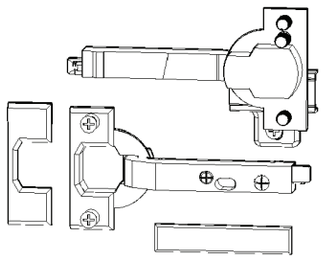

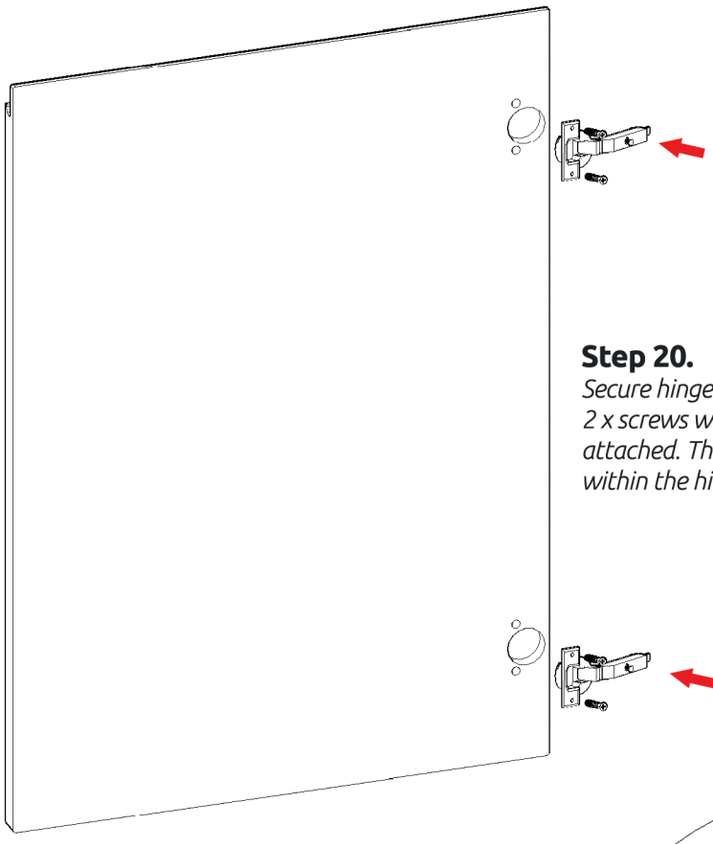

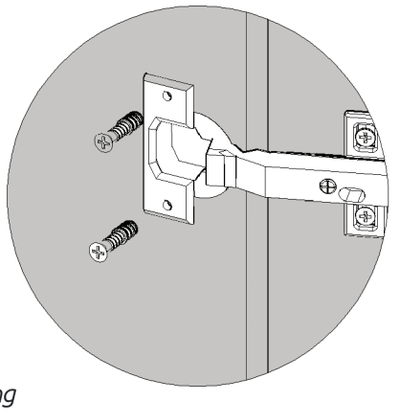

Step 20.
Secure hinges by tightening 2 x screws with plastic grommet attached. These are already positioned within the hinges.

Step 21.
Attach the door to unit where required. Adjust hinges to suit. See below.

To **attach** *door clip hinge onto hinge plate and click to secure.*

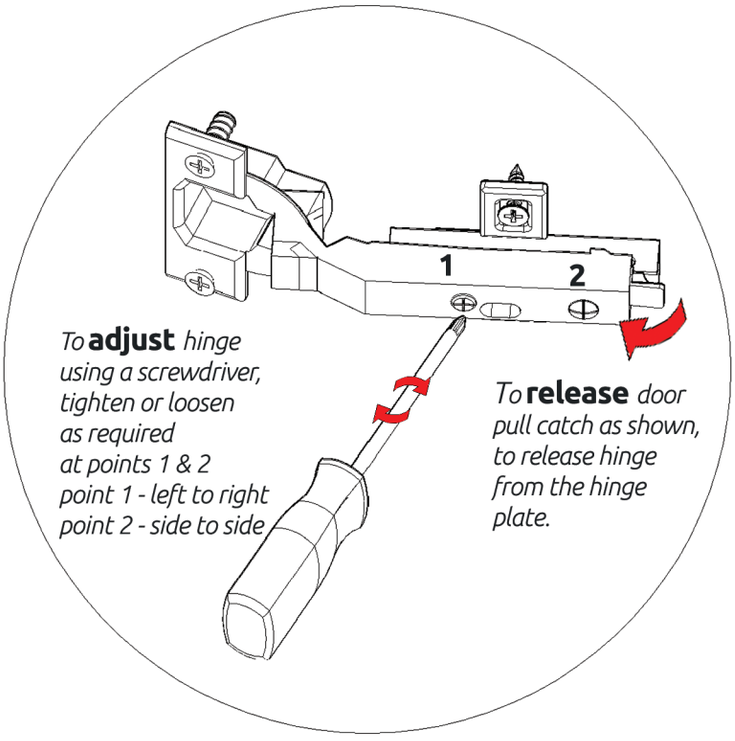

To **adjust** *hinge using a screwdriver, tighten or loosen as required at points 1 & 2*
point 1 - left to right
point 2 - side to side

To **release** *door pull catch as shown, to release hinge from the hinge plate.*

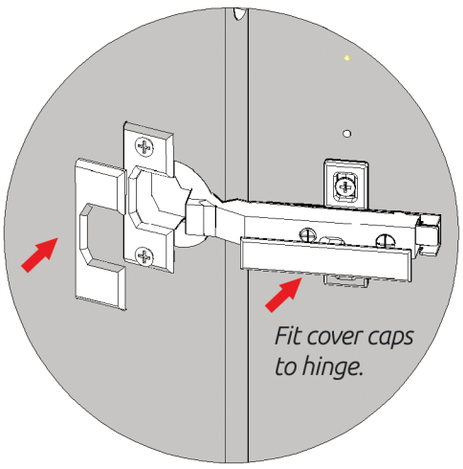

Fit cover caps to hinge.

FI.WR.INS.036 | For Internal Use: WKIN00126_FI.PK.FIT.137_WALL_1000_REV3_psd